E(B-D)LQ011-016C3V3_C3W1

Electrical connection diagram Daikin Monobloc GQI Liquid Injection Integrated BUH

For more details
please check unit wiring

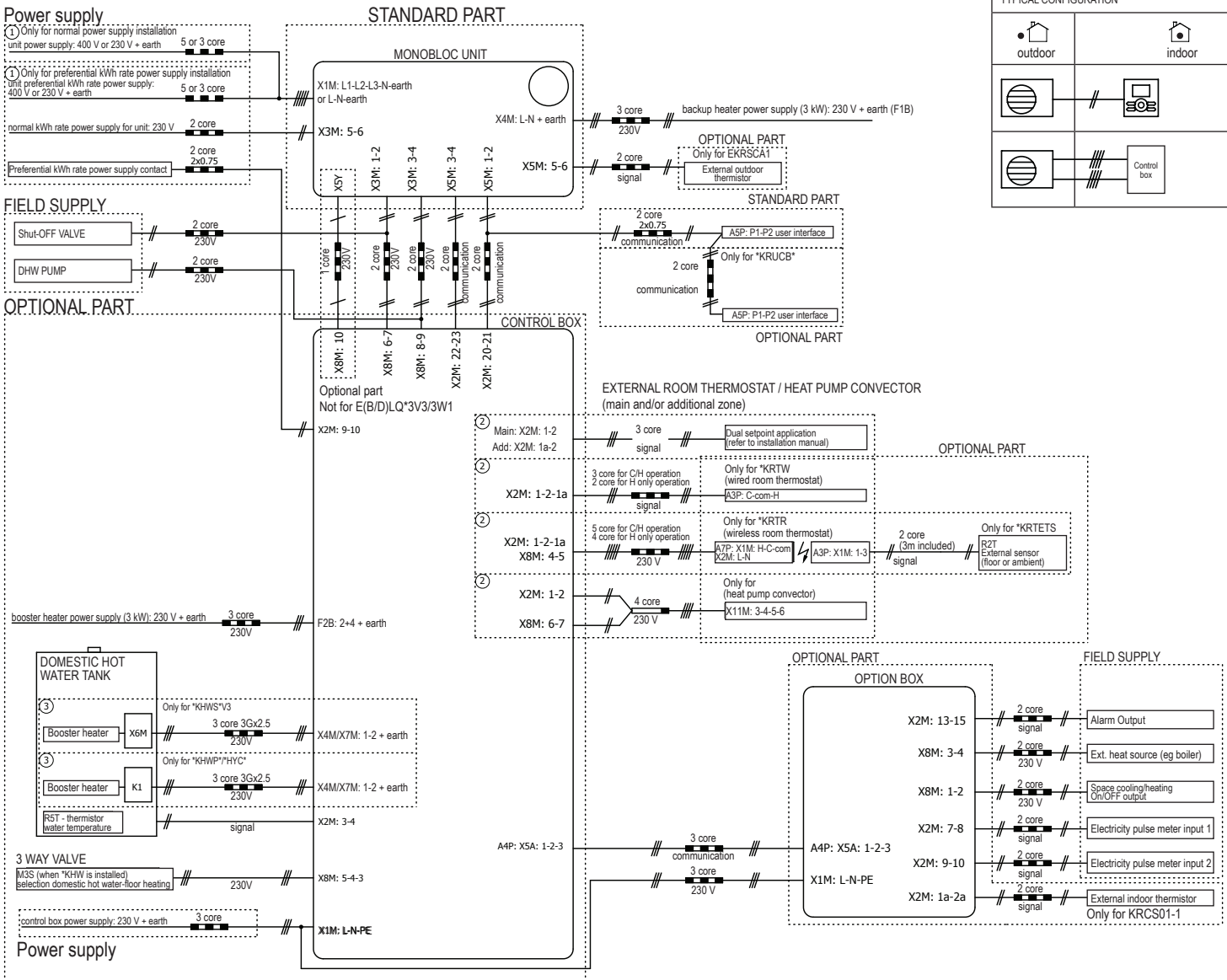

TYPICAL CONFIGURATION		
outdoor	indoor	
		2 low voltage wires
	Control box	Standard: 4 low voltage wires Optional: 4 high voltage wires

NOTES

1. In case of signal cable: keep minimum distance to power cables > 5 cm
2. Available heaters: see combination table