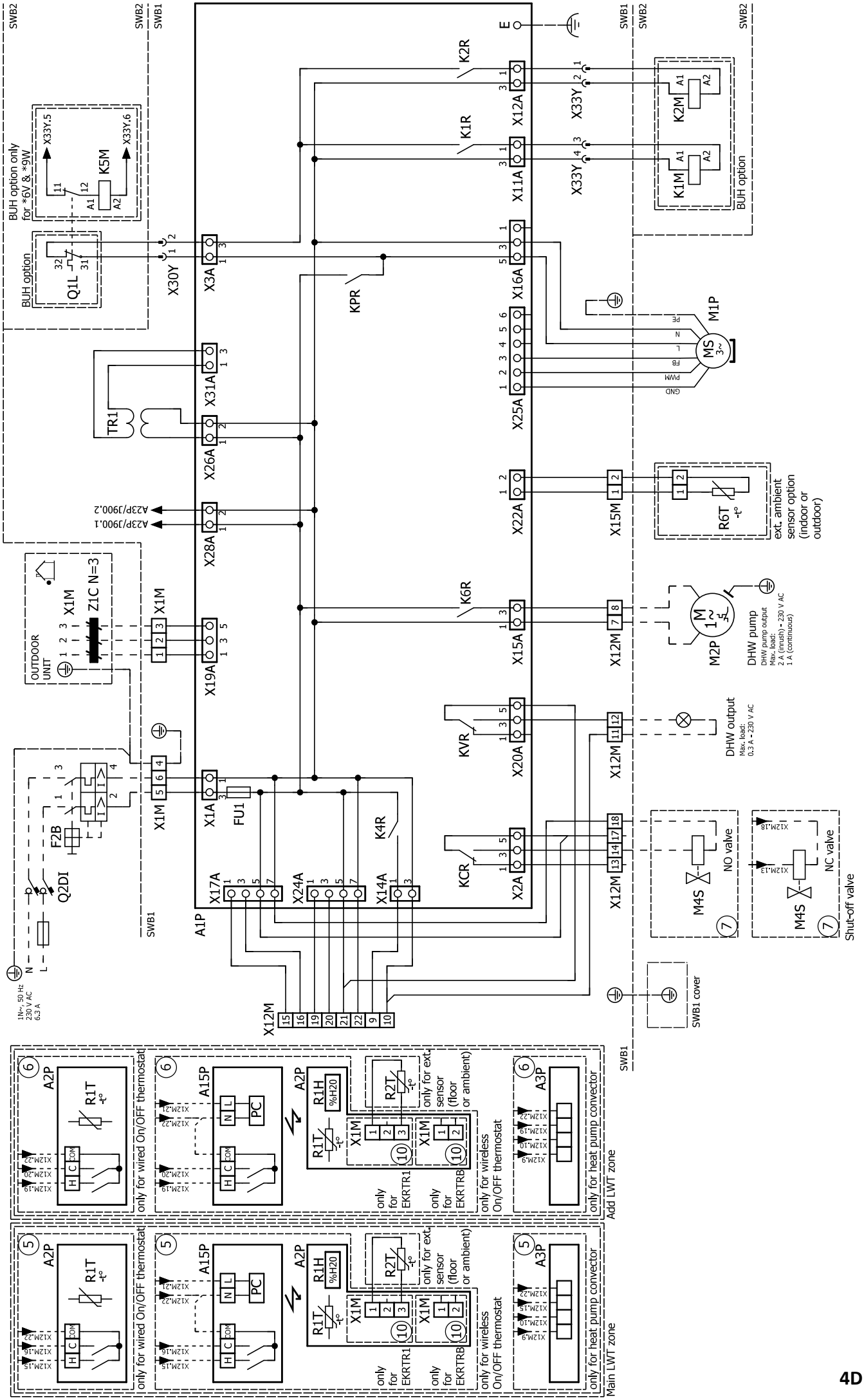
BUH option only for *6V & *9W
BUH option
Q1L
K5M
X33Y.5
X33Y.6
X30Y
X3A
X31A
X26A
X28A
X19A
X1A
X17A
X24A
X14A
X12M
X1M
TR1
A23P/3900.1
A23P/3900.2
OUTDOOR UNIT
Z1C N=3
F2B
Q2DI
FU1
K4R
A1P
SWB1
SWB2
E
K2R
K1R
KPR
K6R
KVR
KCR
X12A
X11A
X16A
X25A
X22A
X15A
X20A
X2A
X33Y
K2M
K1M
M1P
MS 3~
GND
PWM
FB
L
N
PE
X15M
R6T
ext. ambient sensor option (indoor or outdoor)
M2P
DHW pump
DHW pump output
Max. load:
2 A (inrush) - 230 V AC
1 A (continuous)
DHW output
Max. load:
0.3 A - 230 V AC
M4S
NO valve
NC valve
Shut-off valve
SWB1 cover
1N~, 50 Hz
230 V AC
6.3 A
A2P
R1T
H C COM
only for wired On/OFF thermostat
A15P
N L
PC
R1H
%H20
R2T
only for ext. sensor (floor or ambient)
only for EKRTR1
only for EKRTRB
only for wireless On/OFF thermostat
A3P
only for heat pump convector
Add LWT zone
Main LWT zone