# EHVZ-E6V
# EHVZ-E9W

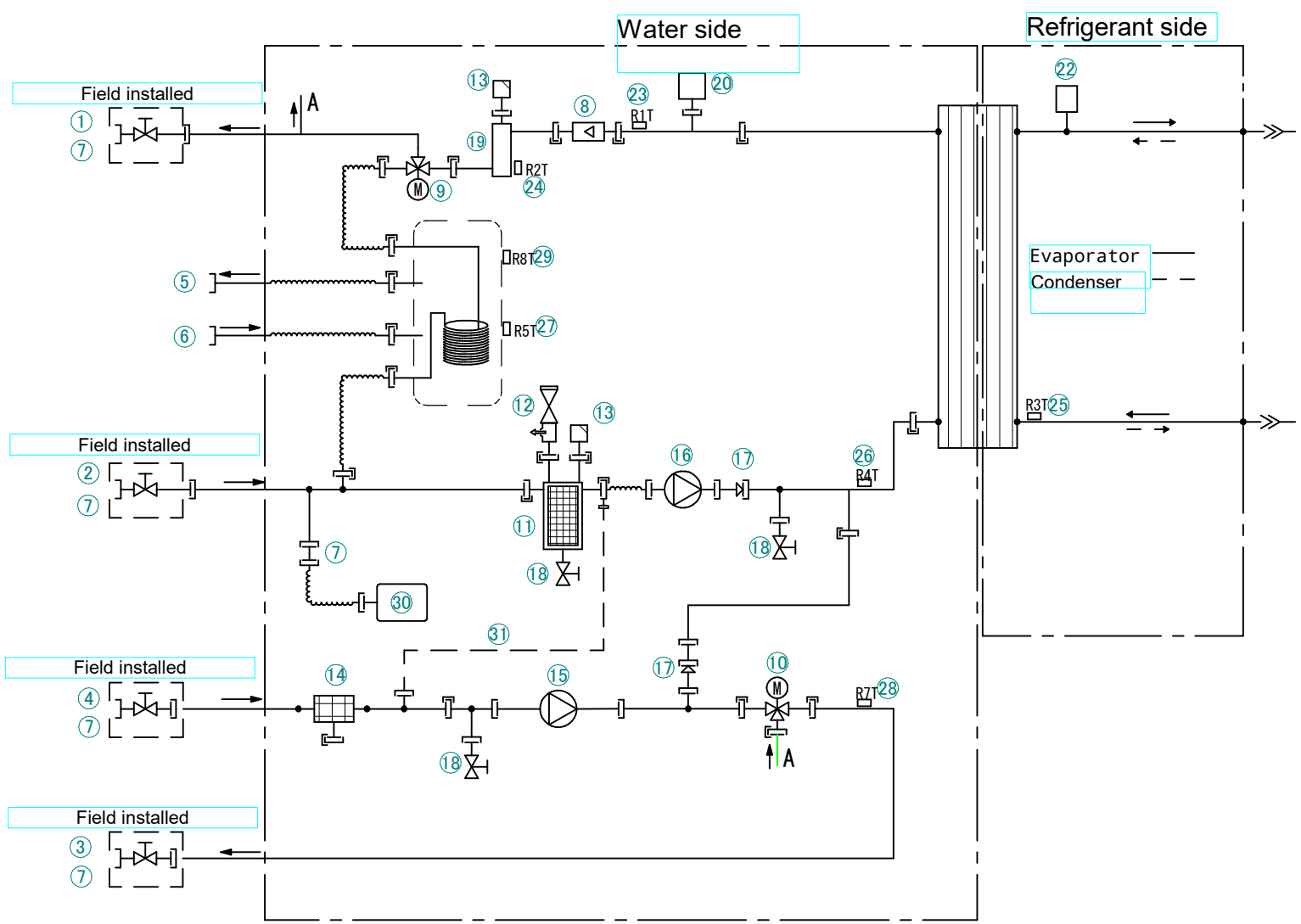


| | |
|---|---|
| Screw connection | Brazed connection |
| Quick coupling | Flare connection |

1. Space heating - water OUT (additional/direct zone)
2. Space heating - water IN (additional/direct zone)
3. Space heating - water OUT (main/mixed zone)
4. Space heating - water IN (main/mixed zone)
5. Domestic hot water: hot water out
6. Domestic hot water: cold water in
7. Connection
8. Flow sensor
9. 3-way valve (space heating/domestic hot water)
10. 3-way valve (mixing valve for the main/mixed zone)
11. Magnetic filter / dirt separator
12. Safety valve
13. Air purge
14. Water filter (main/mixed zone)
15. Pump (main/mixed zone)
16. Pump (additional/direct zone)
17. Check valve
18. Drain valve
19. Backup heater
20. Space heating water pressure sensor
21. Plate heat exchanger
22. Refrigerant pressure sensor
23. R1T – Outlet water heat exchanger thermistor
24. R2T – Outlet water backup heater thermistor
25. R3T – Thermistor (heat exchanger, liquid pipe)
26. R4T – Inlet water thermistor
27. R5T – Tank thermistor
28. R7T – Water outlet thermistor (main/mixed zone)
29. R8T – Tank thermistor
30. Expansion vesse
31. Capillary tube