EKHWSU-D3V3
EKHWS-D3V3

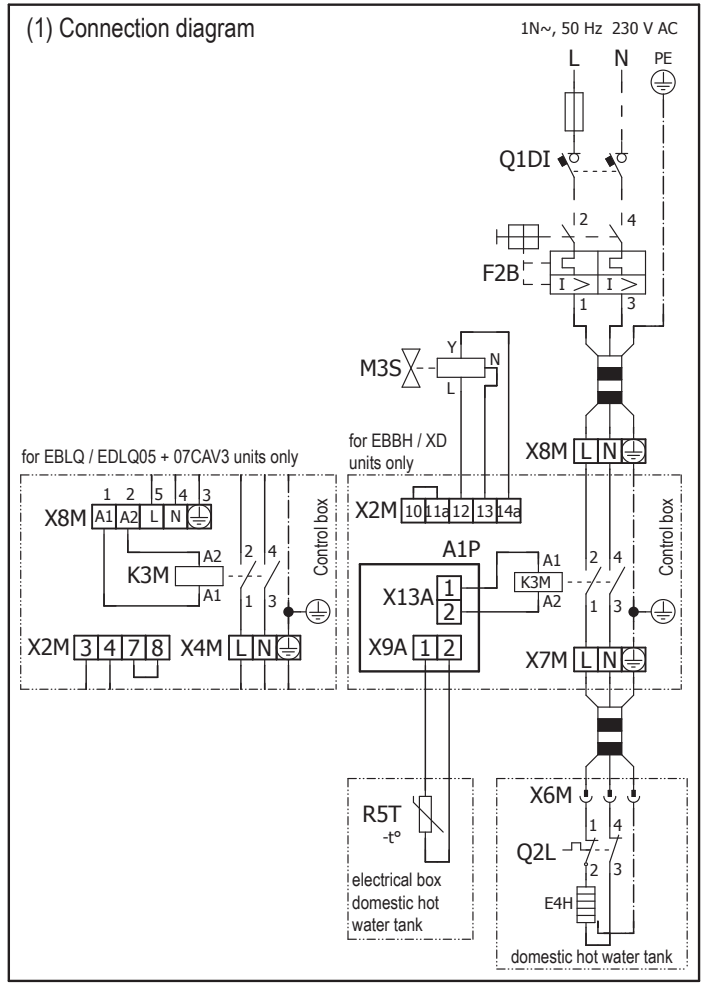

4D113438