EKHWSU-D3V3
EKHWS-D3V3

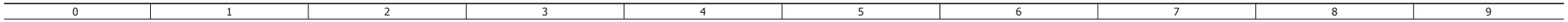

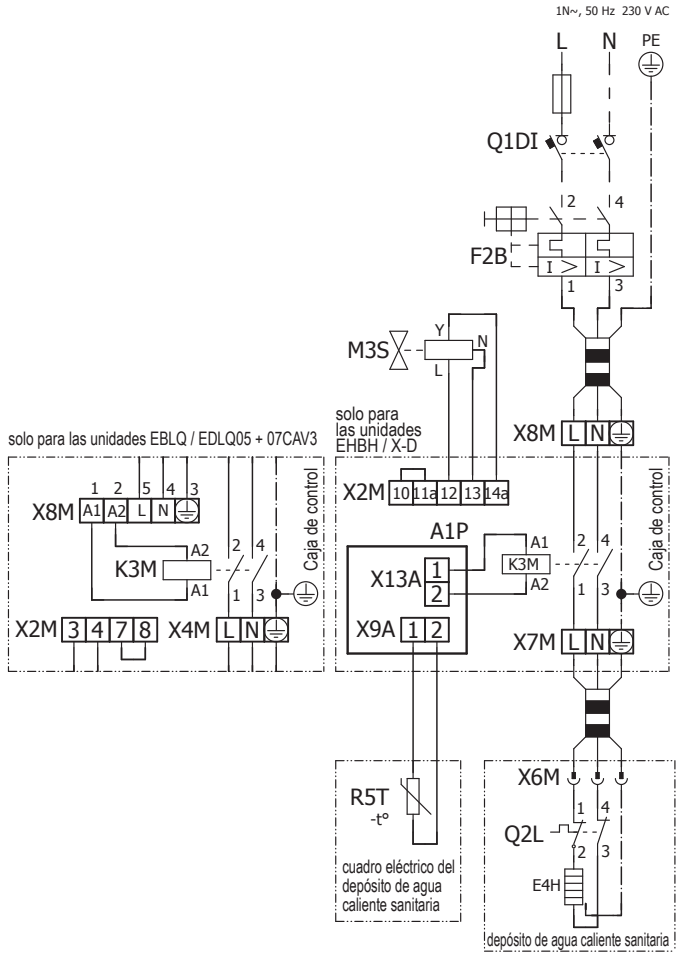

4D113438