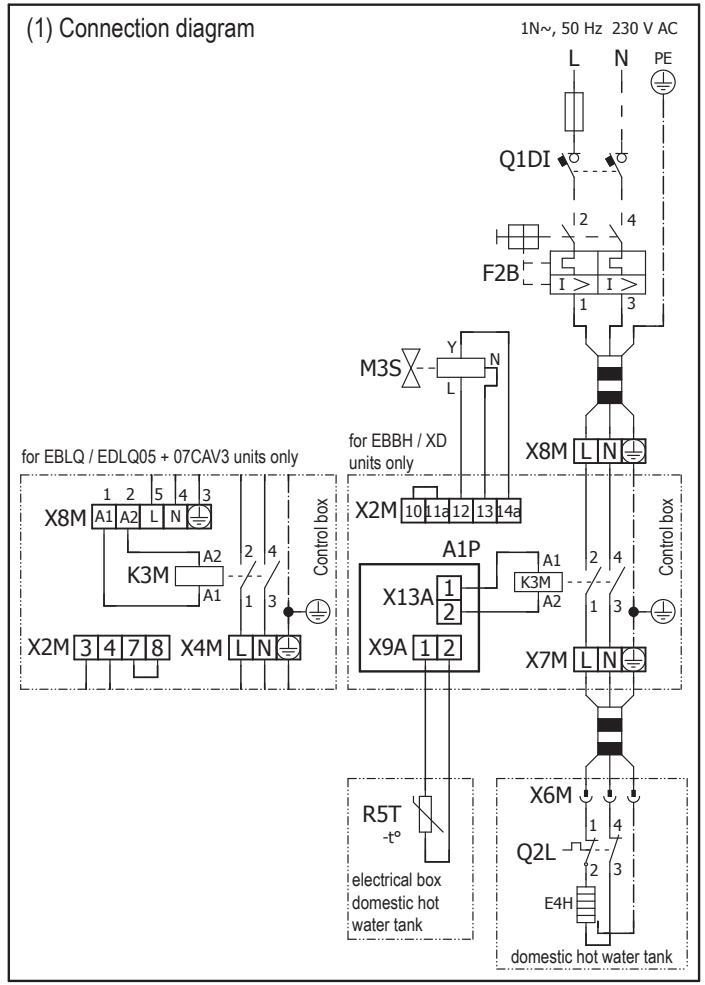
(1) Connection diagram
1N~, 50 Hz 230 V AC
L
N
PE
Q1DI
F2B
M3S
Y
N
L
for EBLQ / EDLQ05 + 07CAV3 units only
X8M
A1
A2
L
N
K3M
X2M
3
4
7
8
X4M
Control box
for EBBH / XD units only
X2M
10
11a
12
13
14a
A1P
X13A
X9A
K3M
X8M
X7M
R5T
-t°
electrical box domestic hot water tank
X6M
Q2L
E4H
domestic hot water tank