ELBH-E6V
ELBH-E9W
ELBX-E6V
ELBX-E9W

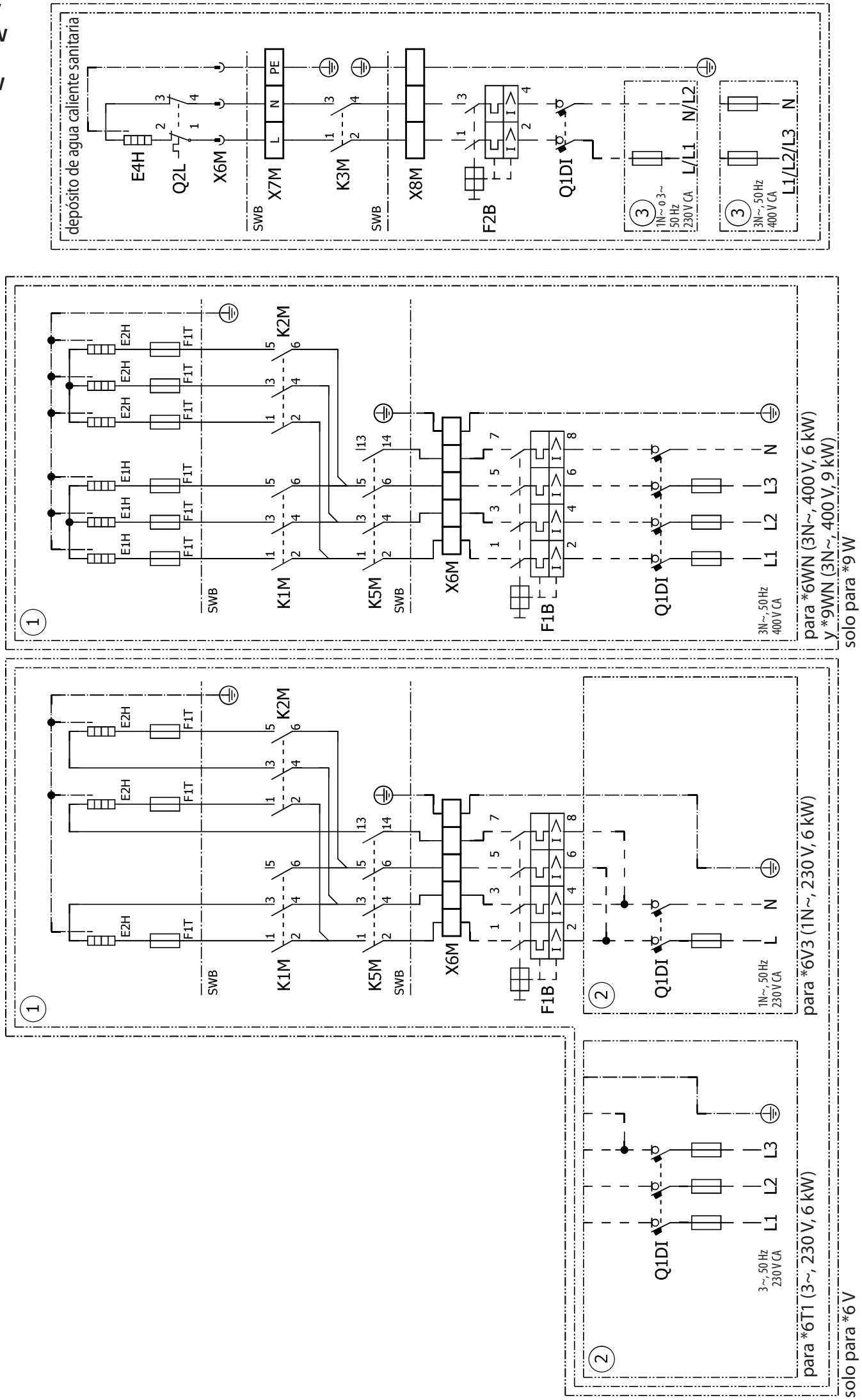

4D143234A