ELSH-E
ELSHB-E
ELSX-E
ELSXB-E

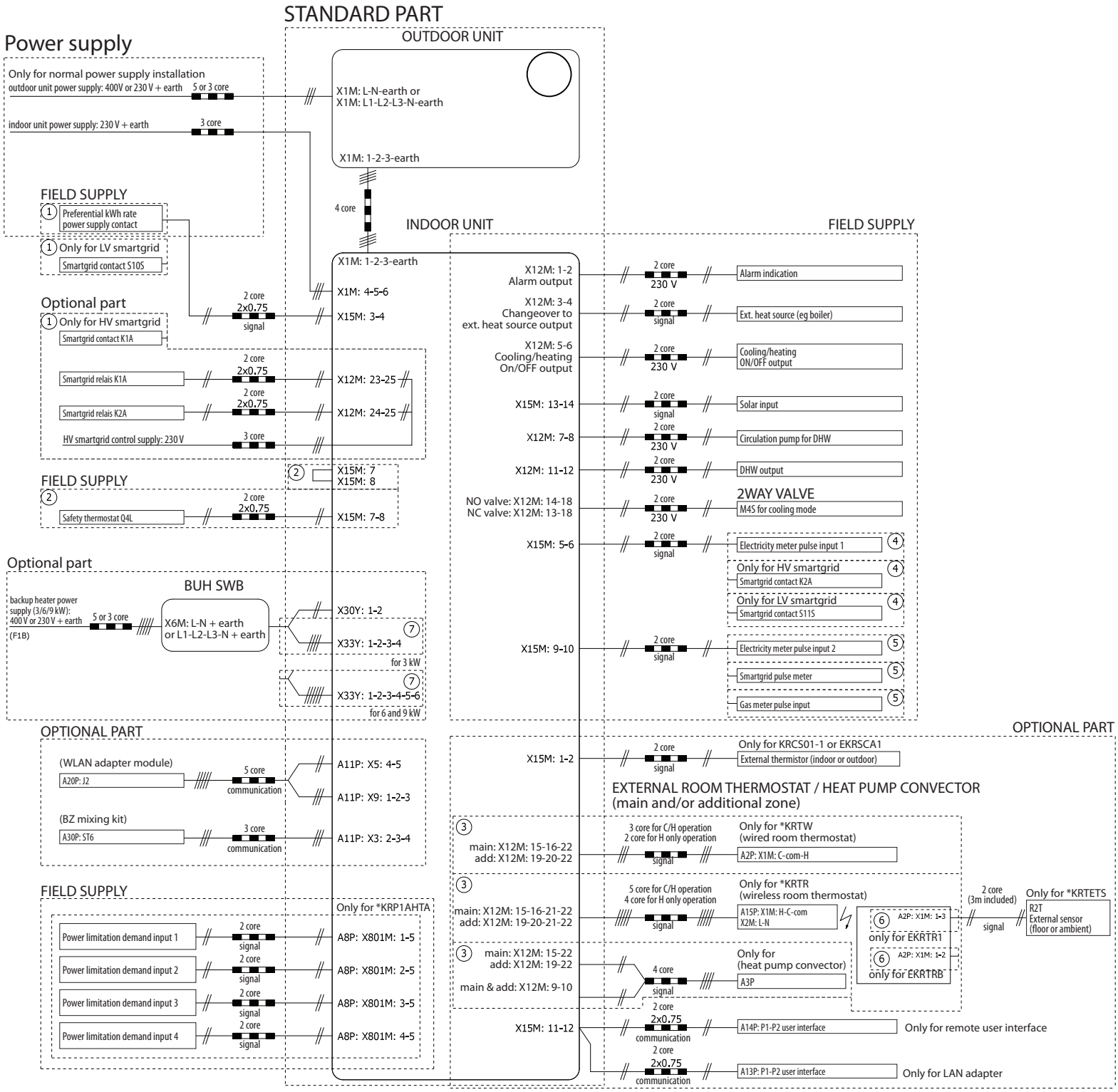

NOTE

- In case of signal cable: keep minimum distance to power cables > 5 cm