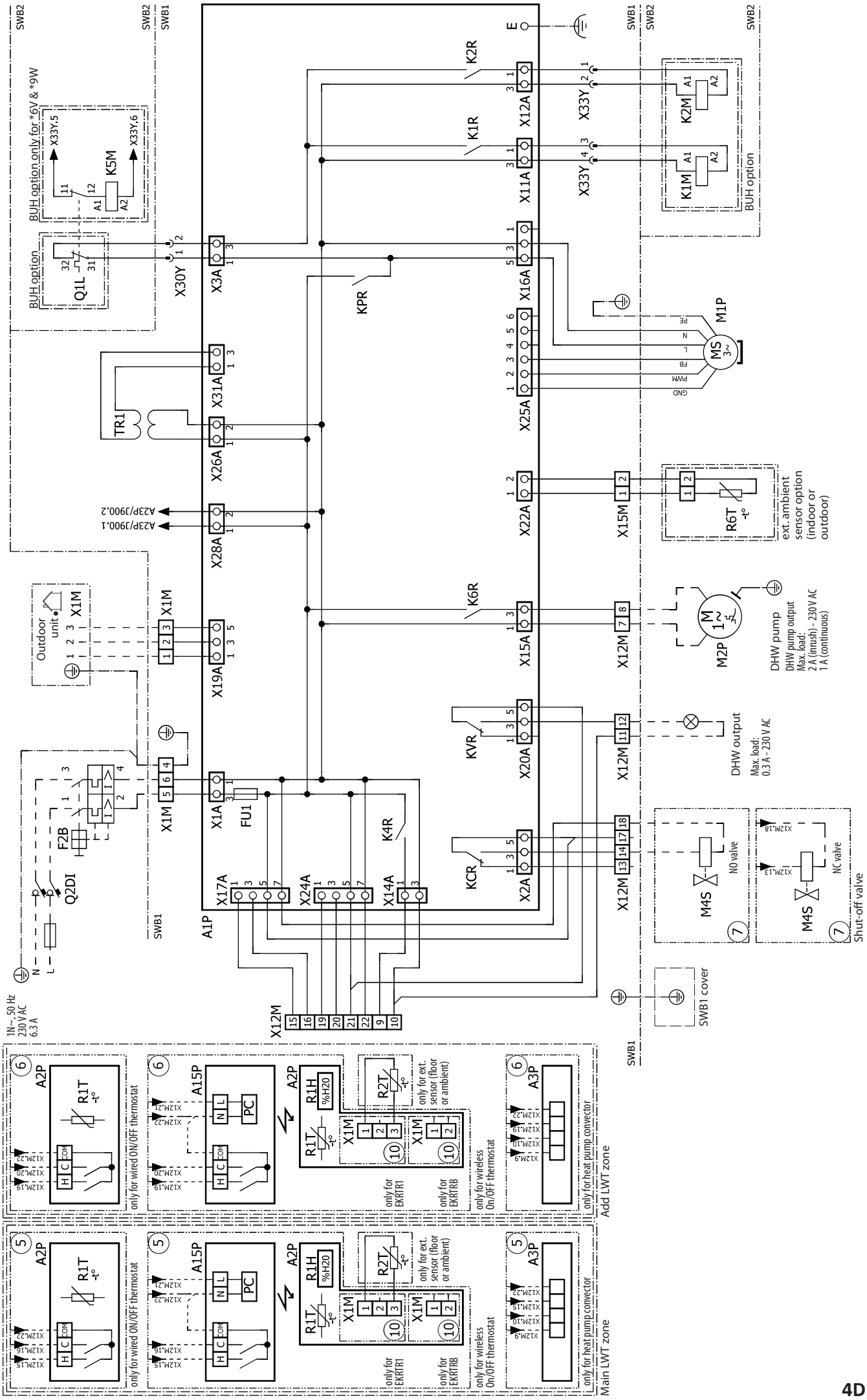
SWB2
SWB1
BUH option only for *6V & *9W
X33Y.5
X33Y.6
K5M
BUH option
Q1L
X30Y
X3A
X31A
TR1
X26A
A23P/J900.1
A23P/J900.2
X28A
Outdoor unit
X1M
X19A
X1A
FU1
F2B
Q2DI
1N~ 50 Hz
230 V AC
6.3 A
A1P
X17A
X24A
X14A
X12M
K2R
K1R
KPR
K6R
KVR
KCR
K4R
E
X12A
X11A
X16A
X25A
X22A
X15A
X20A
X2A
X33Y
K2M
K1M
BUH option
M1P
MS
3~
GND
PWM
FB
L
N
PE
X15M
R6T
ext. ambient sensor option (indoor or outdoor)
M2P
DHW pump
DHW pump output
Max. load:
2 A (inrush) - 230 V AC
1 A (continuous)
DHW output
Max. load:
0.3 A - 230 V AC
M4S
N0 valve
NC valve
Shut-off valve
SWB1 cover
A2P
R1T
only for wired ON/OFF thermostat
A15P
PC
R1H
%H20
R2T
only for ext. sensor (floor or ambient)
only for EKRTR1
only for EKRTRB
only for wireless On/OFF thermostat
A3P
only for heat pump convector
Add LWT zone
Main LWT zone

4D142803A