**ELVH-E6V**
**ELVH-E9W**
**ELVX-E6V**
**ELVX-E9W**

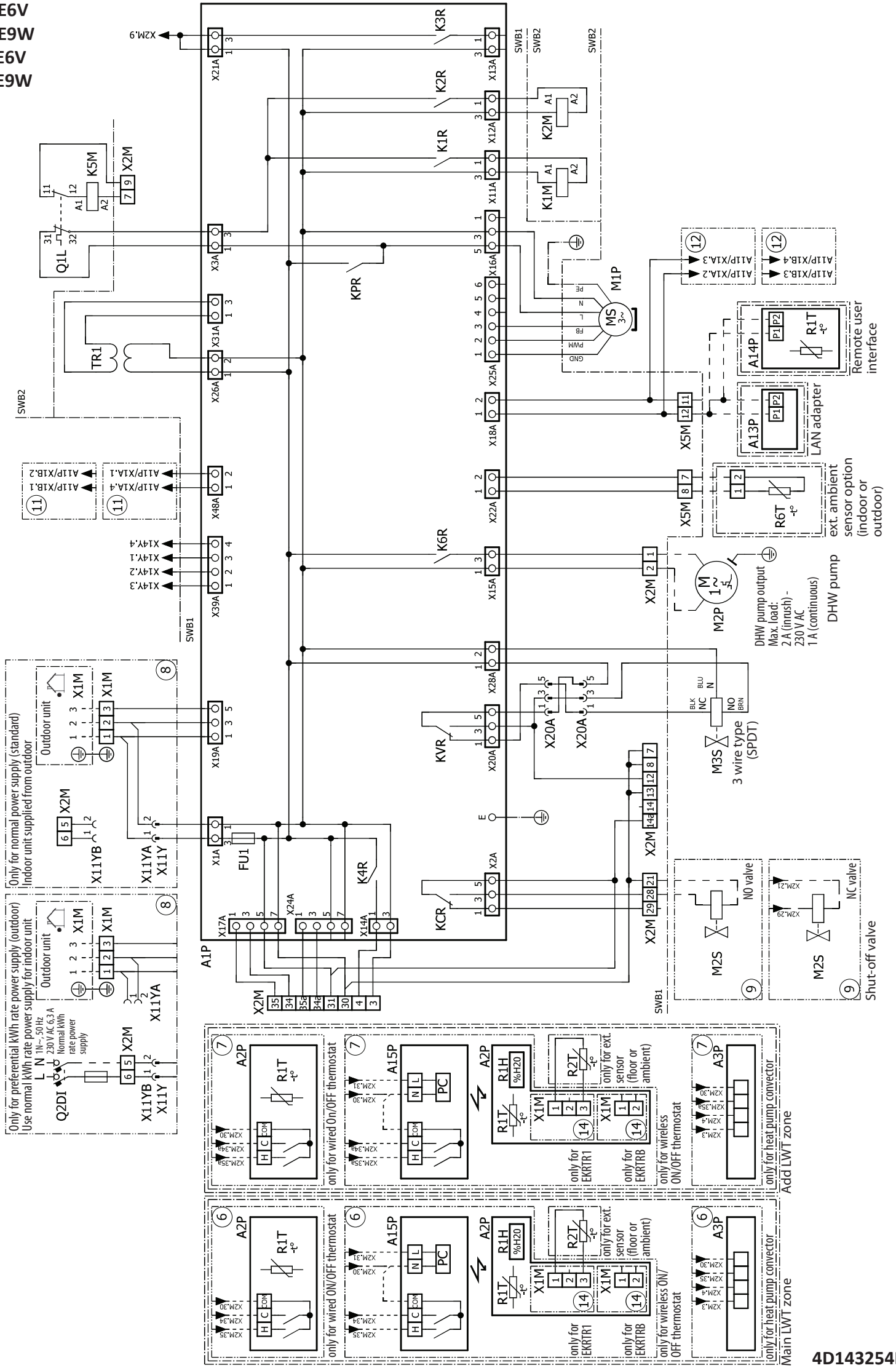


**4D143254B**