ETSH-D
ETSHB-D
ETSX-D
ETSXB-D
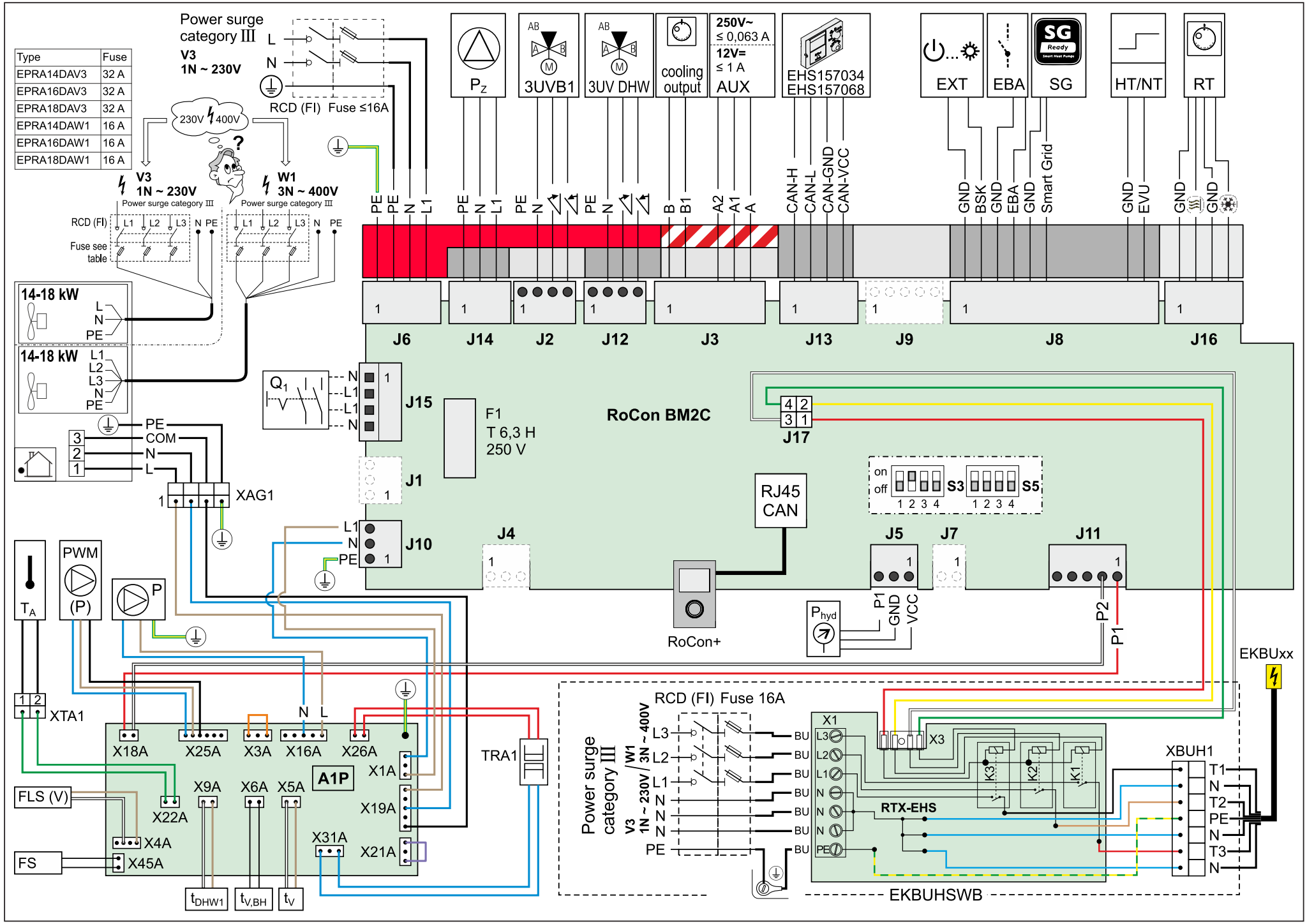
Type	Fuse
EPRA14DAV3	32 A
EPRA16DAV3	32 A
EPRA18DAV3	32 A
EPRA14DAW1	16 A
EPRA16DAW1	16 A
EPRA18DAW1	16 A