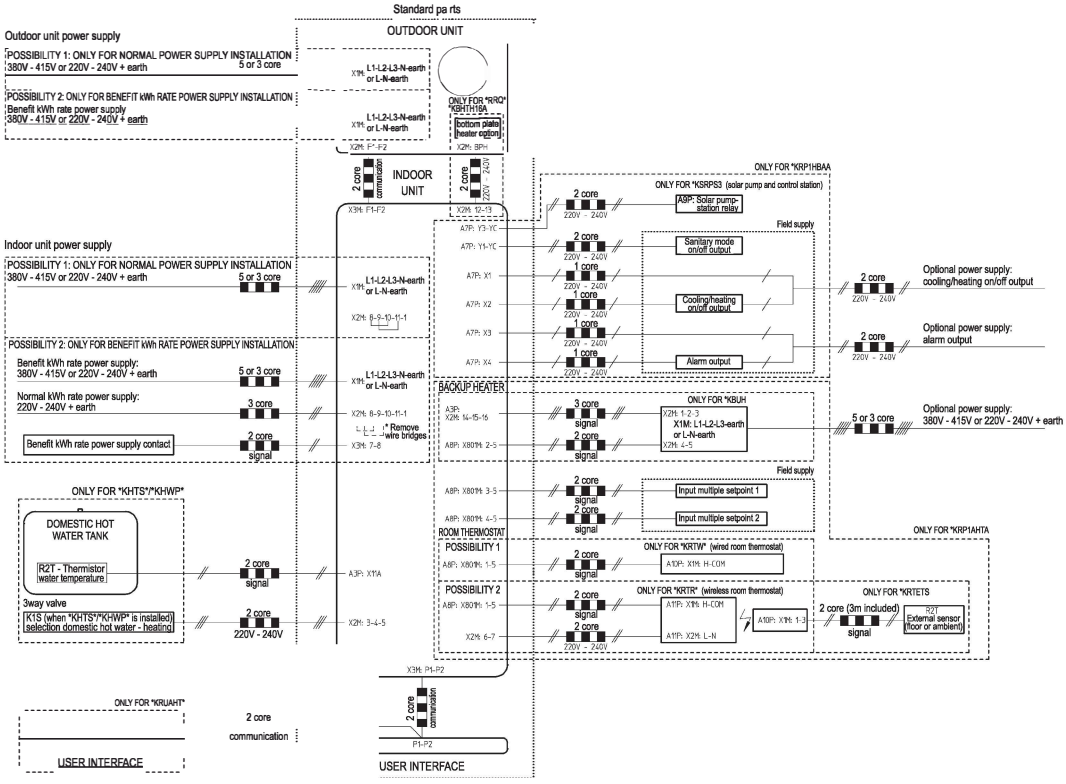

NOTES

1. In case of signal cable or communication cable, keep minimum distance to power cables > 25mm