EPSX10A / EPSX14A / EPSXB10A / EPSXB14A Connection Possibilities for X42M / X43M (Page 2/2)

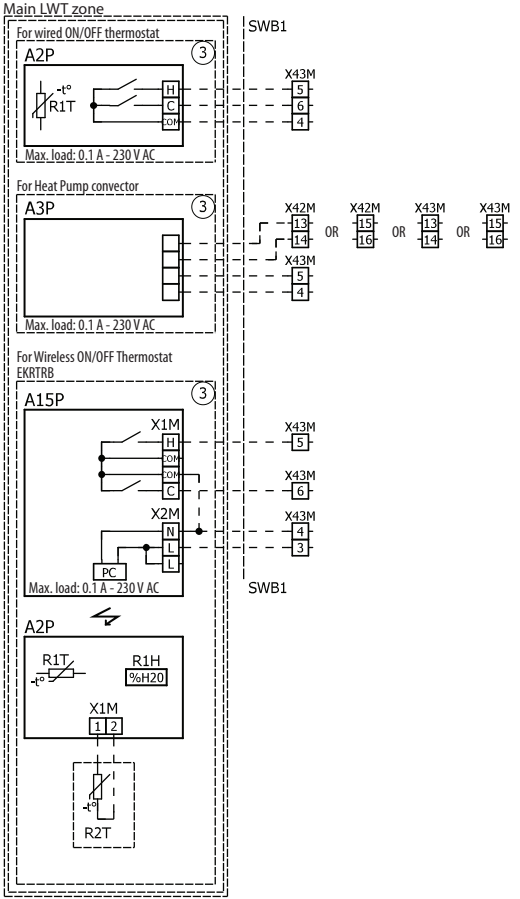

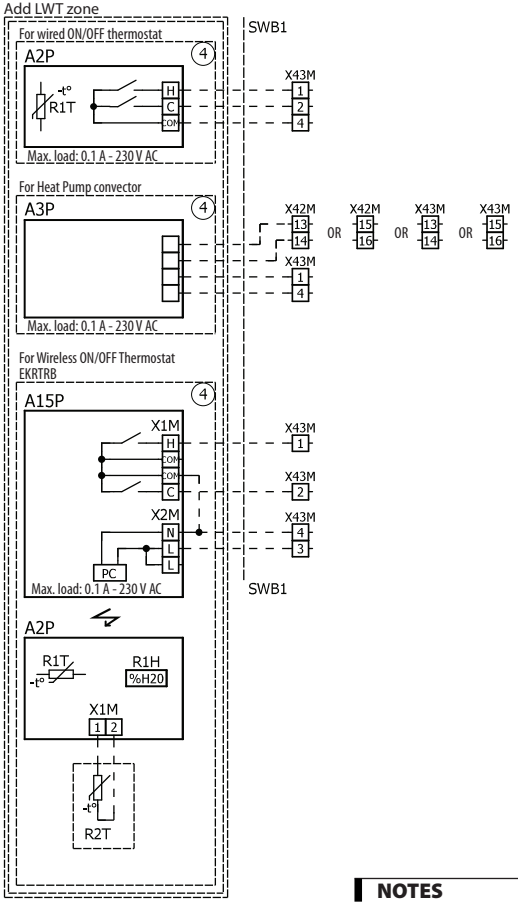

NOTES

Refer to page 10 of the Wiring Diagram for Terminal Block designation legend.