EPSX07A / EPSXB07A

NOTES to go through before starting the unit

X2M	: Main Terminal Outdoor Unit
X40M	: Main Terminal Indoor Unit
X41M	: Main Terminal Back-Up Heater
X42M + X43M	: Field Wiring for High Voltage
X44M + X45M	: Field Wiring for SELV
—— —— —— –	: Earth wiring
– – – – – – –	: Field supply
(1)	: Several wiring possibilities

: Option

: Wiring depending on model

: Not mounted in switch box

: PCB

NOTES

1. Connection point of the power supply for the BUH should be foreseen outside the unit.

Backup heater power supply
- ☐ 6 kW (1/N~, 230V)
- ☐ 9 kW (3/N~, 400V)

User installed options:
- ☐ Remote user interface
- ☐ Ext. indoor thermistor
- ☐ Ext. outdoor thermistor
- ☐ Safety thermostat
- ☐ Smartgrid kit
- ☐ W-LAN Cartridge
- ☐ Bizone Mixing Kit

Main LWT:
- ☐ ON/OFF thermostat (wired)
- ☐ ON/OFF thermostat (wireless)
  - ☐ Ext. thermistor
- ☐ Heat pump convector

Add LWT:
- ☐ ON/OFF thermostat (wired)
- ☐ ON/OFF thermostat (wireless)
  - ☐ Ext. thermistor
- ☐ Heat pump convector

POSITION IN SWITCH BOX

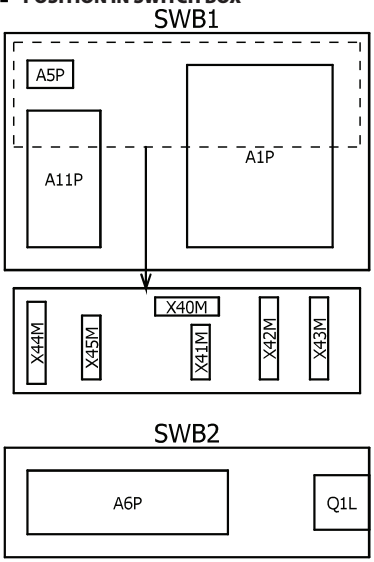

LEGEND

Part n°		Description
A1P		Hyrdo PCB
A2P	*	ON/OFF thermostat (PC=power circuit)
A3P	*	Heat Pump Convector
A5P		Power Supply PCB
A6P		Multi-Step Back-Up Heater PCB
A9P		Daikin Eye (Status indicator)
A11P		Interface PCB
A12P		Display PCB
A14P	*	Remote User Interface
A15P	*	Receiver PCB (wireless ON/OFF thermostat)
A30P	*	Bizone Mixing Kit PCB
B2L		Flow sensor
B4L		Gas sensor
B1PW		Water pressure sensor
CN* (A5P)		Connector
E2H		Backup heater element
E4H		Backup heater element
E5H		Backup heater element
E*P (A9P)		Indication LED
F1B	#	Overcurrent fuse backup heater
F2B	#	Overcurrent fuse Main
F1T		Thermal Fuse backup heater
F1U (A1P)		Fuse 5 A 250 V for PCB
K1A, K2A	*	High voltage smartgrid relay
K*R (A*P)		Relay on PCB
K80* (A6P)		Relay on PCB
M1P		Unit Pump
M1S		DHW Tank Mixing 3-Way Valve
M2P	#	Domestic hot water pump
M2S	#	2-Way valve for cooling mode
M3S		Bypass Mixing 3-Way valve
M4S		Shutt off valve - Inlet Leak Stop

Part n°		Description
P* (A14P)		Terminal
P1M		Display
PC (A15P)	*	Power circuit
PHC-T (A6P)		Thermal cutout detection
Q*DI	#	Earth Leakage Circuit Breaker
Q1L		Thermal protector backup heater
Q4L	#	Safety thermostat
R1H (A2P)	*	Humidity sensor
R1T (A1P)		Outlet water heat exchanger thermistor
R1T (A2P)	*	Ambient sensor ON/OFF thermostat
R1T (A14P)	*	Ambient sensor user interface
R2T (A1P)		Outlet backup heater thermistor
R2T (A2P)	*	External sensor (floor or ambient)
R5T, R8T, R11T		Domestic hot water thermistor
R6T	*	External in- or outdoor ambient thermistor
R7T		Main Circuit leaving water thermistor
S1S	#	Preferential kWh rate PS contact
S2S	#	Electrical meter pulse input 1
S3S	#	Electrical meter pulse input 2
S4S	#	Smartgrid feed-in
S10S-S11S	#	Low voltage smartgrid contact
S12S	#	Gas meter input
S13S	#	Solar Input
ST6 (A30P)		Connector
TS1		Touch Sensor
X*A, X*Y, X*Y*		Connector
X*M		Terminal strip
Z*C		Noise Filter (Ferrite Core)

* : optional #: field supply