EPVX10A4V / EPVX10A9W / EPVX10UA4V
EPVX14A4V / EPVX14A9W / EPVX14UA4V

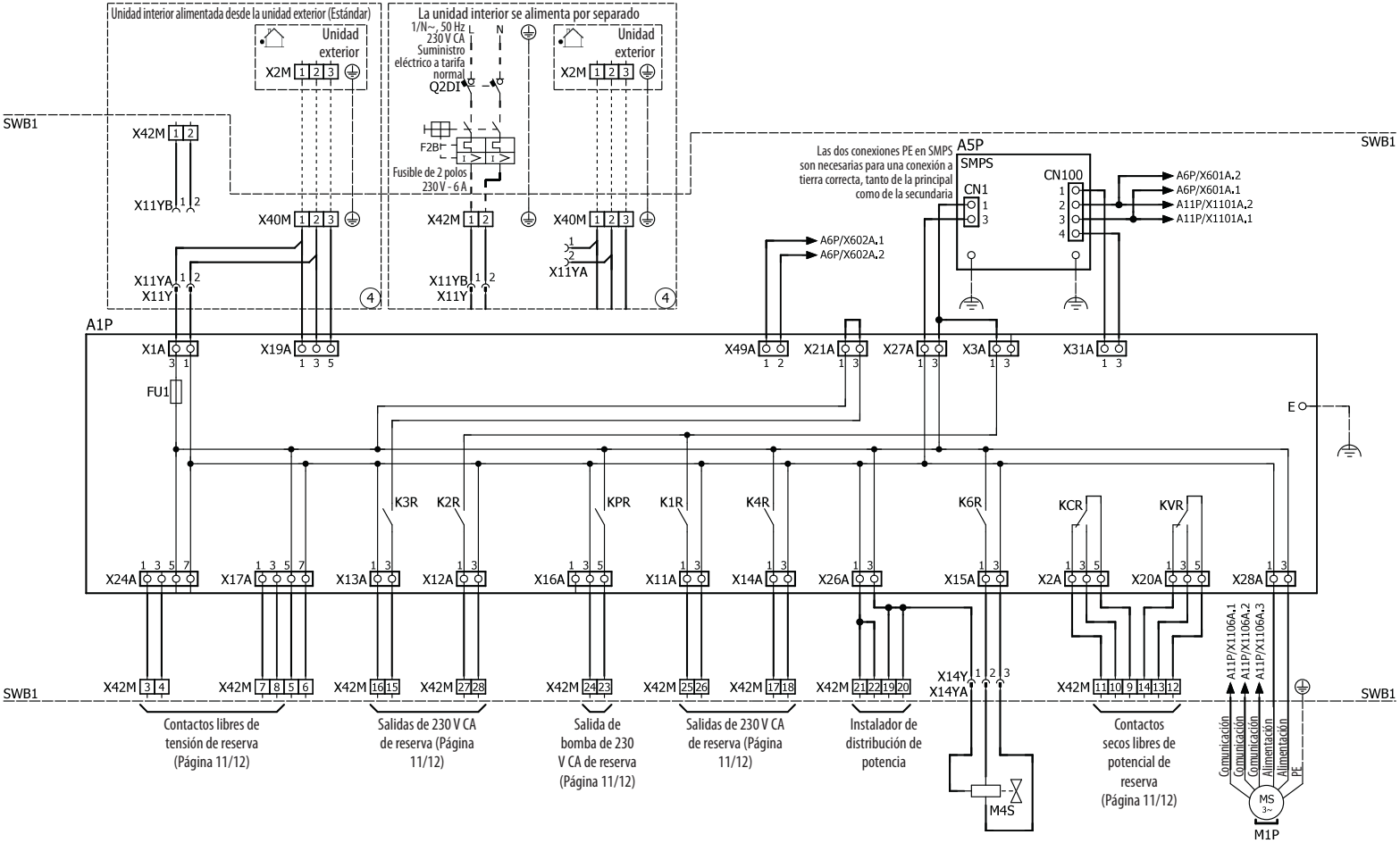

4D146607A