MSB2181Y1WAA

LAYOUT

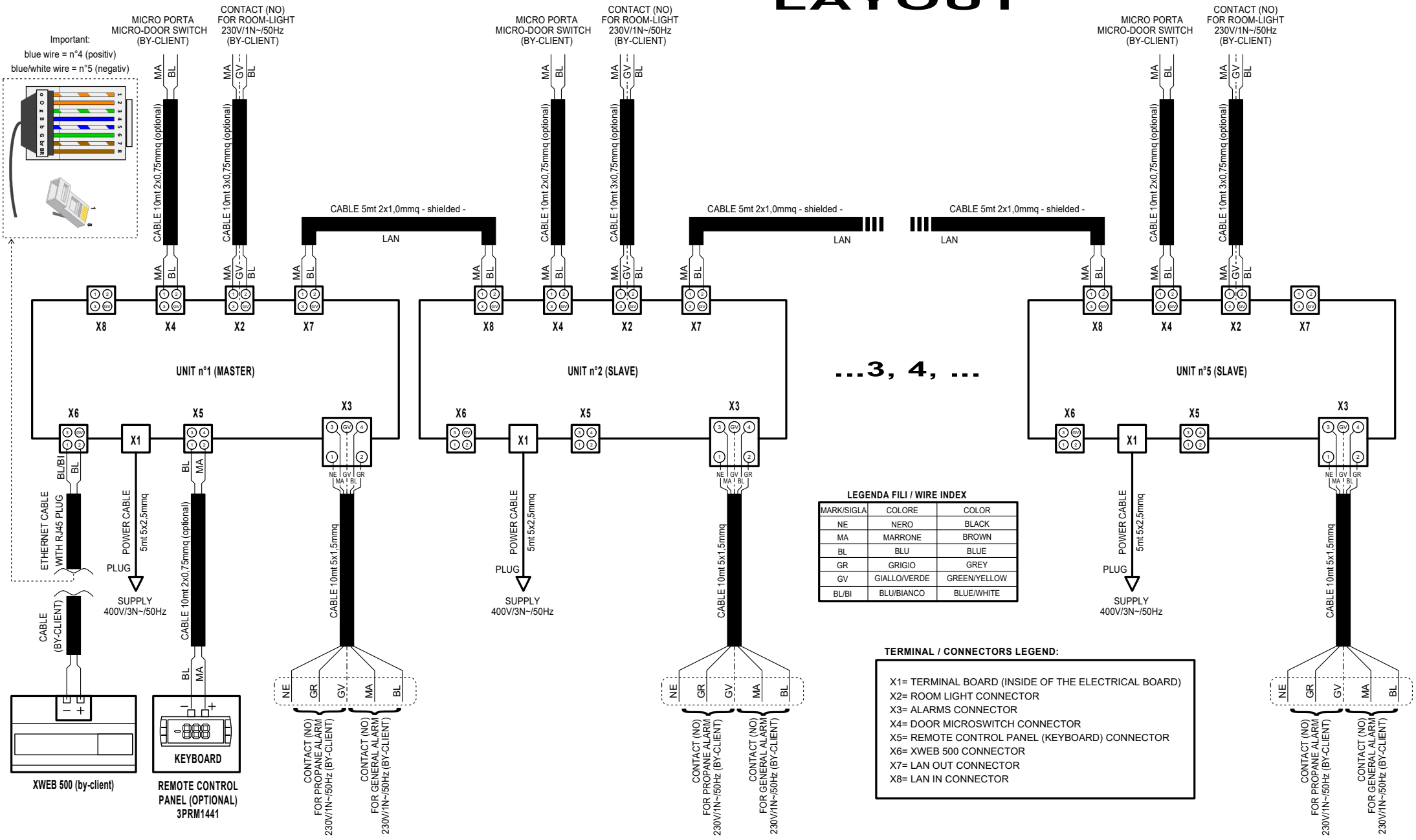

LEGENDA FILI / WIRE INDEX

MARK/SIGLA	COLORE	COLOR
NE	NERO	BLACK
MA	MARRONE	BROWN
BL	BLU	BLUE
GR	GRIGIO	GREY
GV	GIALLO/VERDE	GREEN/YELLOW
BL/BI	BLU/BIANCO	BLUE/WHITE

TERMINAL / CONNECTORS LEGEND:

X1= TERMINAL BOARD (INSIDE OF THE ELECTRICAL BOARD)
X2= ROOM LIGHT CONNECTOR
X3= ALARMS CONNECTOR
X4= DOOR MICROSWITCH CONNECTOR
X5= REMOTE CONTROL PANEL (KEYBOARD) CONNECTOR
X6= XWEB 500 CONNECTOR
X7= LAN OUT CONNECTOR
X8= LAN IN CONNECTOR