2MXM68A

Outdoor Unit

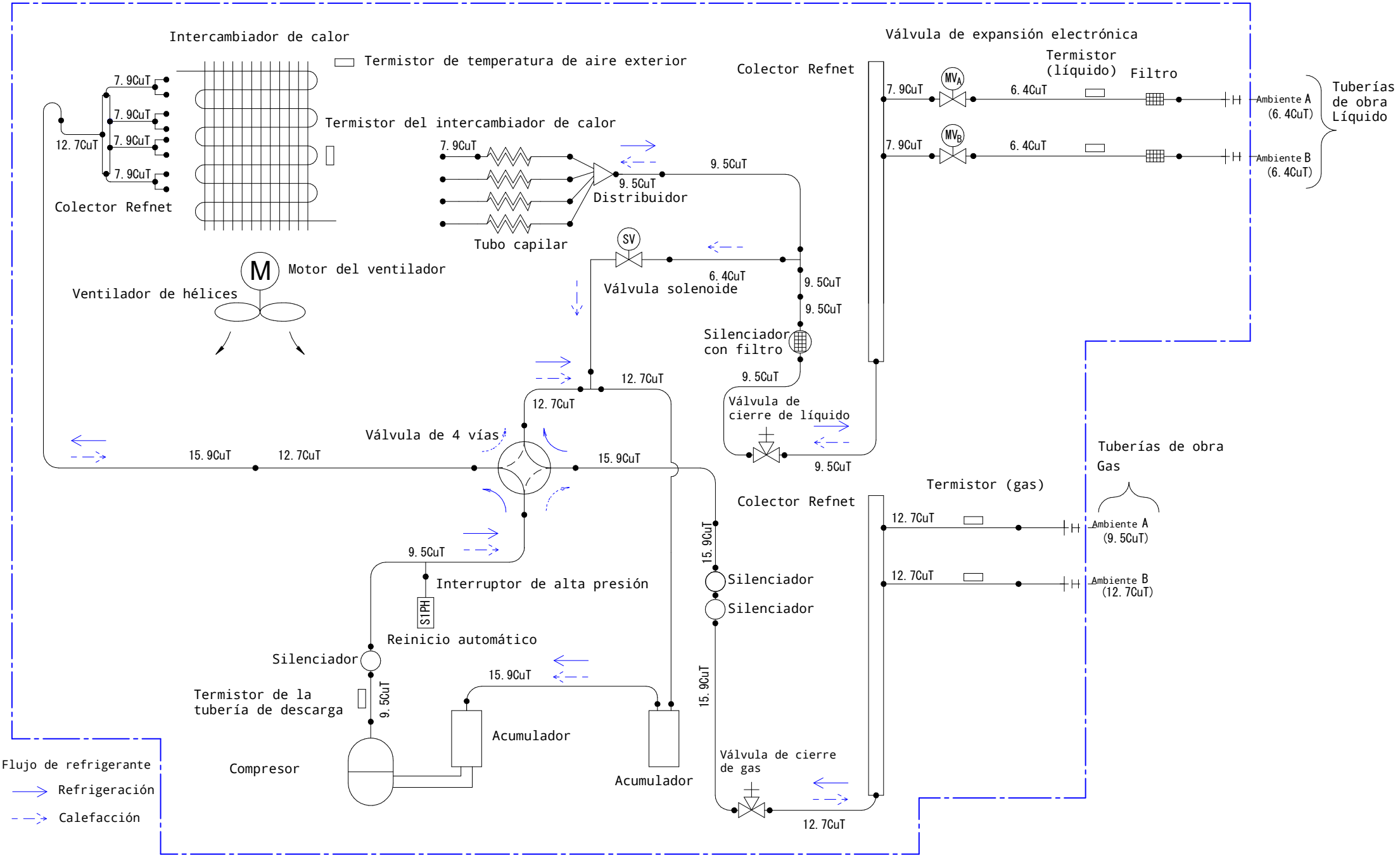

3D130564