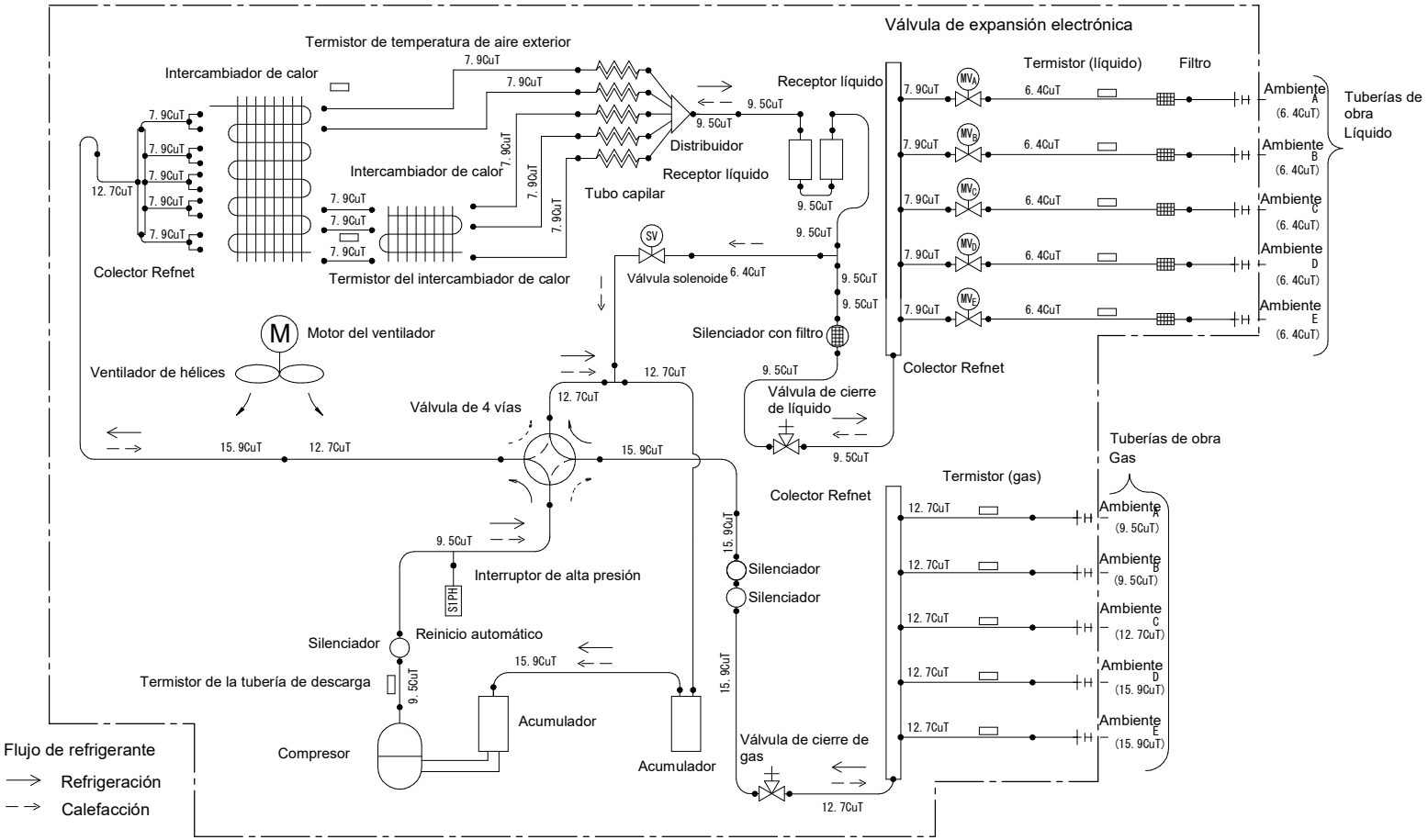Outdoor Unit