3MXM40-52A8

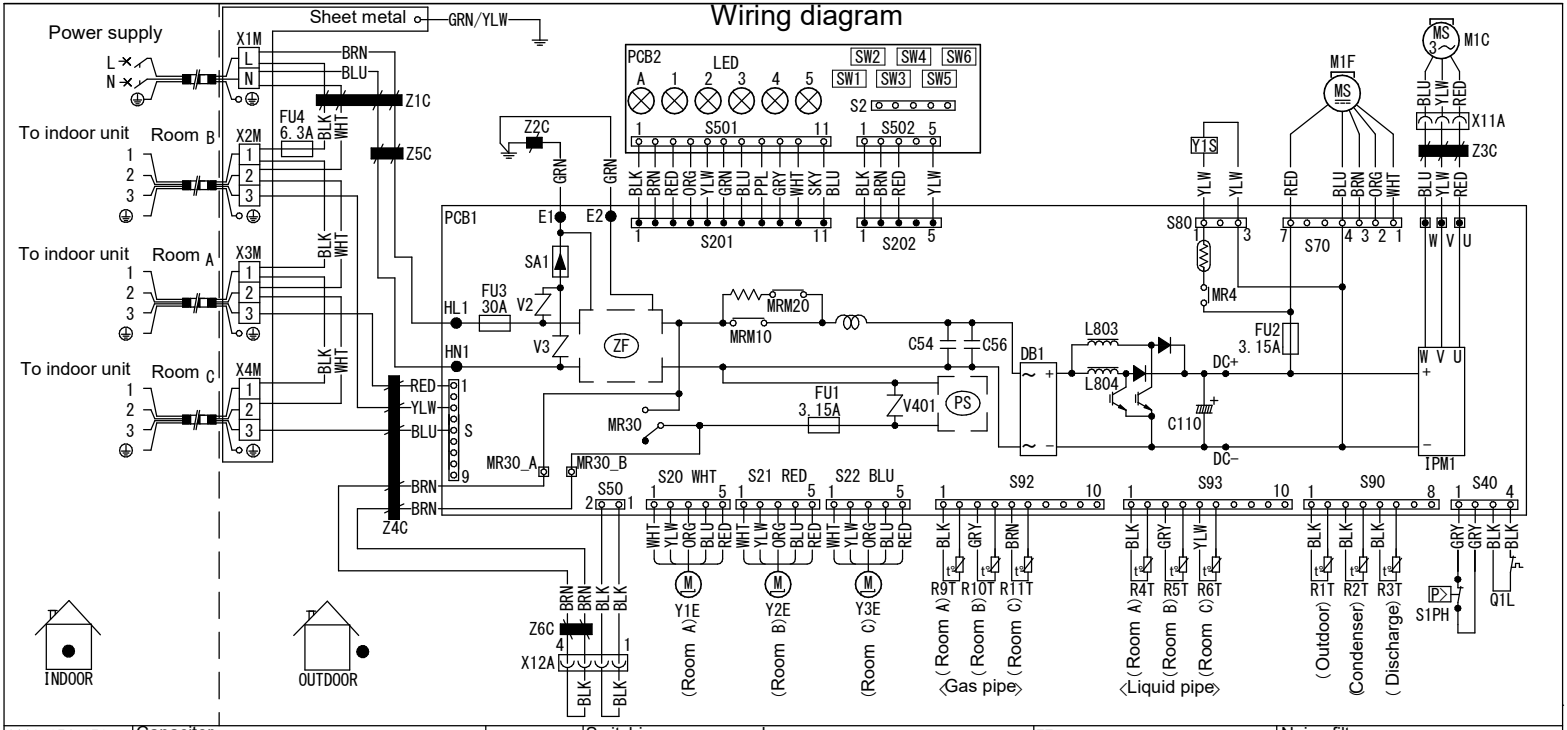

C110, C54, C56	Capacitor	PS	Switching power supply	ZF	Noise filter	
DB1	Diode bridge	Q1L	Overload protector	S, S2-S502	Connector	
FU1, FU2, FU3, FU4	Fuse	R1T-R11T	Thermistor	U, V, W	Connector	
IPM1	Intelligent power module	SA1	Surge arrester	X11A, X12A, MR30_A, MR30_B	Connector	
L803, L804	Reactor	S1PH	High pressure switch	Field wiring		
LED1-5, LEDA	Light-emitting diode	SW1-SW6	Switch	Screw terminal		
M1C	Compressor motor	V2, V3, V401	Varistor	Connector		
M1F	Fan motor	X1M-X4M	Terminal strip with earth terminal	BLK: black	GRY: grey	SKY BLU: sky blue
MRM10, MRM20	Magnetic relay	Y1E-Y3E	Electronic expansion valve coil	BLU: blue	ORG: orange	WHT: white
MR4, MR30	Magnetic relay	Y1S	Reversing solenoid valve coil	BRN: brown	PPL: purple	YLW: yellow
PCB1, PCB2	Printed circuit board	Z1C-Z6C	Ferrite core	GRN: green	RED: red	3D106247-1C