2MXM68A8

Outdoor Unit

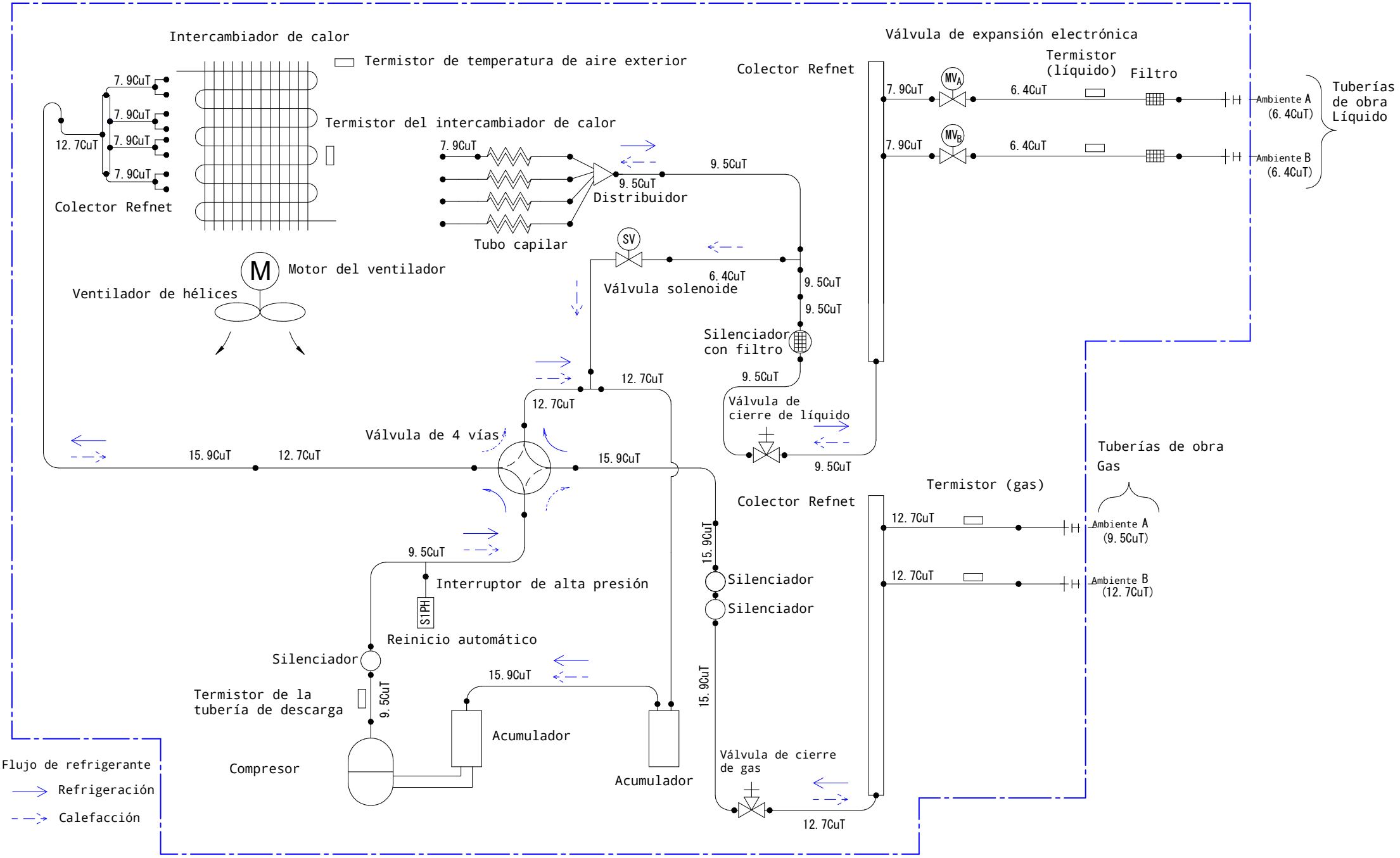

3D130564