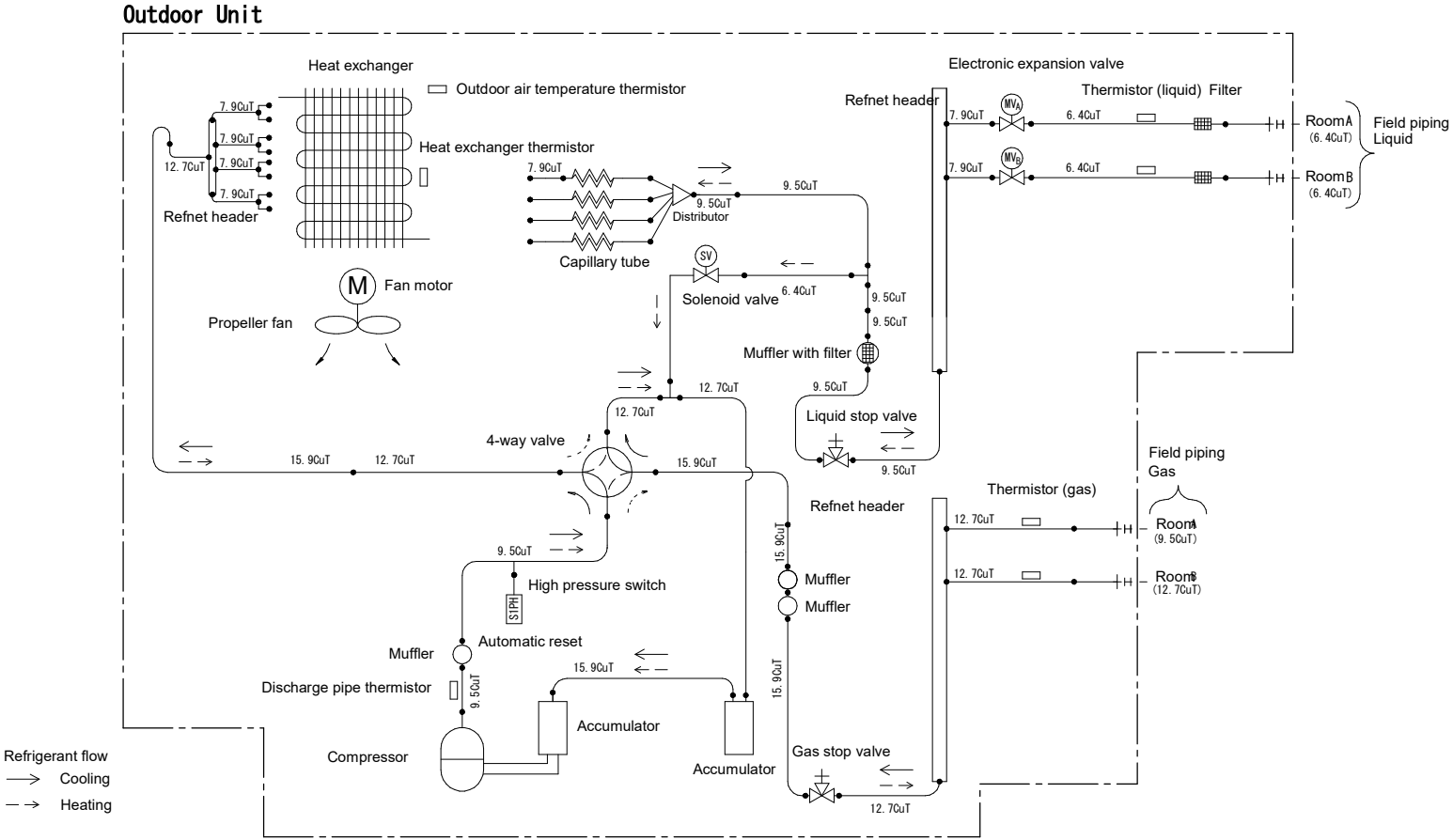
Outdoor Unit
Heat exchanger
Outdoor air temperature thermistor
Heat exchanger thermistor
Refnet header
Capillary tube
Distributor
Fan motor
Propeller fan
Solenoid valve
Muffler with filter
Liquid stop valve
4-way valve
High pressure switch
Automatic reset
Muffler
Discharge pipe thermistor
Compressor
Accumulator
Accumulator
Refnet header
Muffler
Muffler
Gas stop valve
Refnet header
Electronic expansion valve
Thermistor (liquid)
Filter
Room A
(6.4CuT)
Room B
(6.4CuT)
Field piping
Liquid
Thermistor (gas)
Field piping
Gas
Room A
(9.5CuT)
Room B
(12.7CuT)
Refrigerant flow
Cooling
Heating