ARXP-K3

For the power requirements, refer to the nameplate.

Wiring diagram

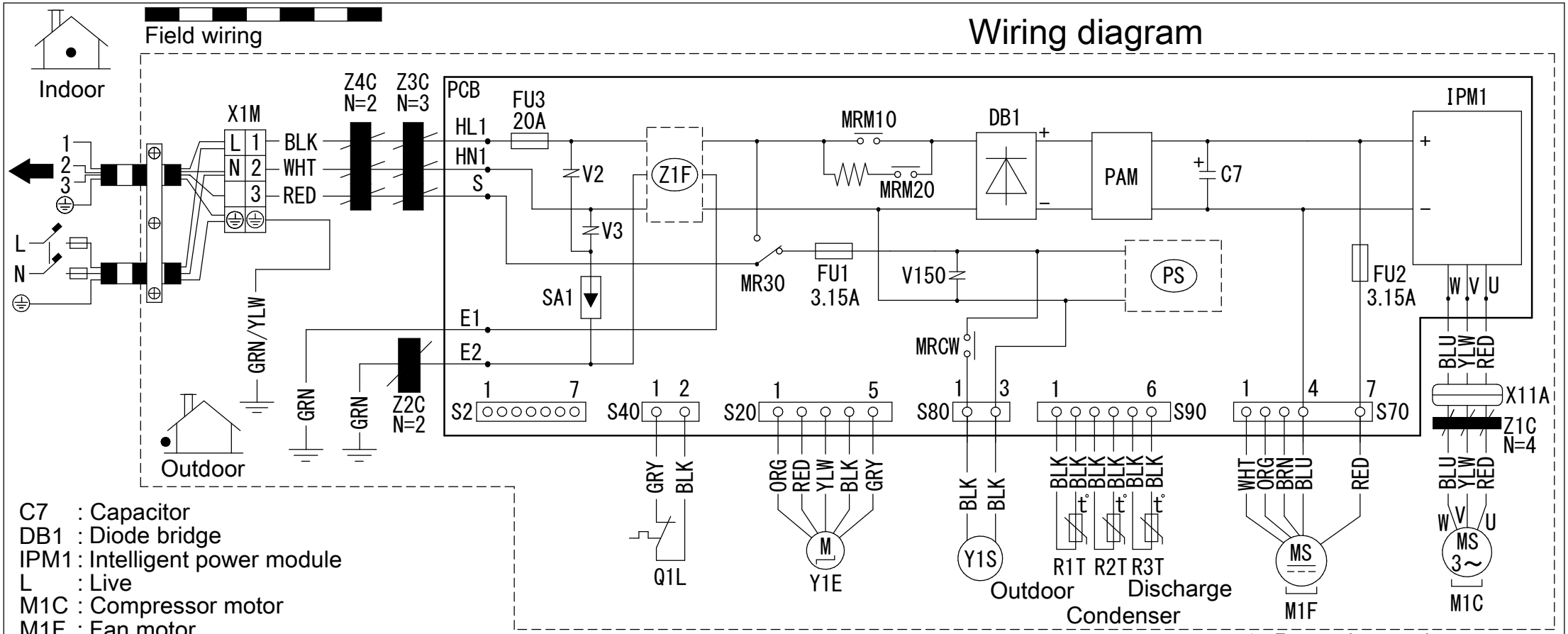

C7 : Capacitor
DB1 : Diode bridge
IPM1 : Intelligent power module
L : Live
M1C : Compressor motor
M1F : Fan motor
N : Neutral
PAM : Pulse-amplitude modulation
PCB : Printed circuit board
PS : Switching power supply
Q1L : Overload protector
SA1 : Surge arrestor
X1M : Terminal strip
Y1E : Electronic expansion valve coil
Y1S : Reversing solenoid valve coil
Z1F : Noise filter

FU1,FU2,FU3 : Fuse
MR30,MRM10
MRM20,MRCW : Magnetic relay
R1T,R2T,R3T : Thermistor
S20,S40,S70,S80
S90,X11A,S2 : Connector
V2,V3,V150 : Varistor
Z1C,Z2C,Z3C,Z4C : Ferrite core
HL1,HN1,S,E1,E2 : Connection

⊕ : Protective earth
⏚ : Earth

BLK : Black
WHT : White
BRN : Brown
RED : Red
GRN : Green
YLW : Yellow
ORG : Orange
BLU : Blue
GRY : Grey

Notes

Notes Size: 140 x 80

Notes Refer to purchasing specification AS303002, unless otherwise specified.

4D099916B