ARXP35N9 / RXP35N9

Outdoor unit

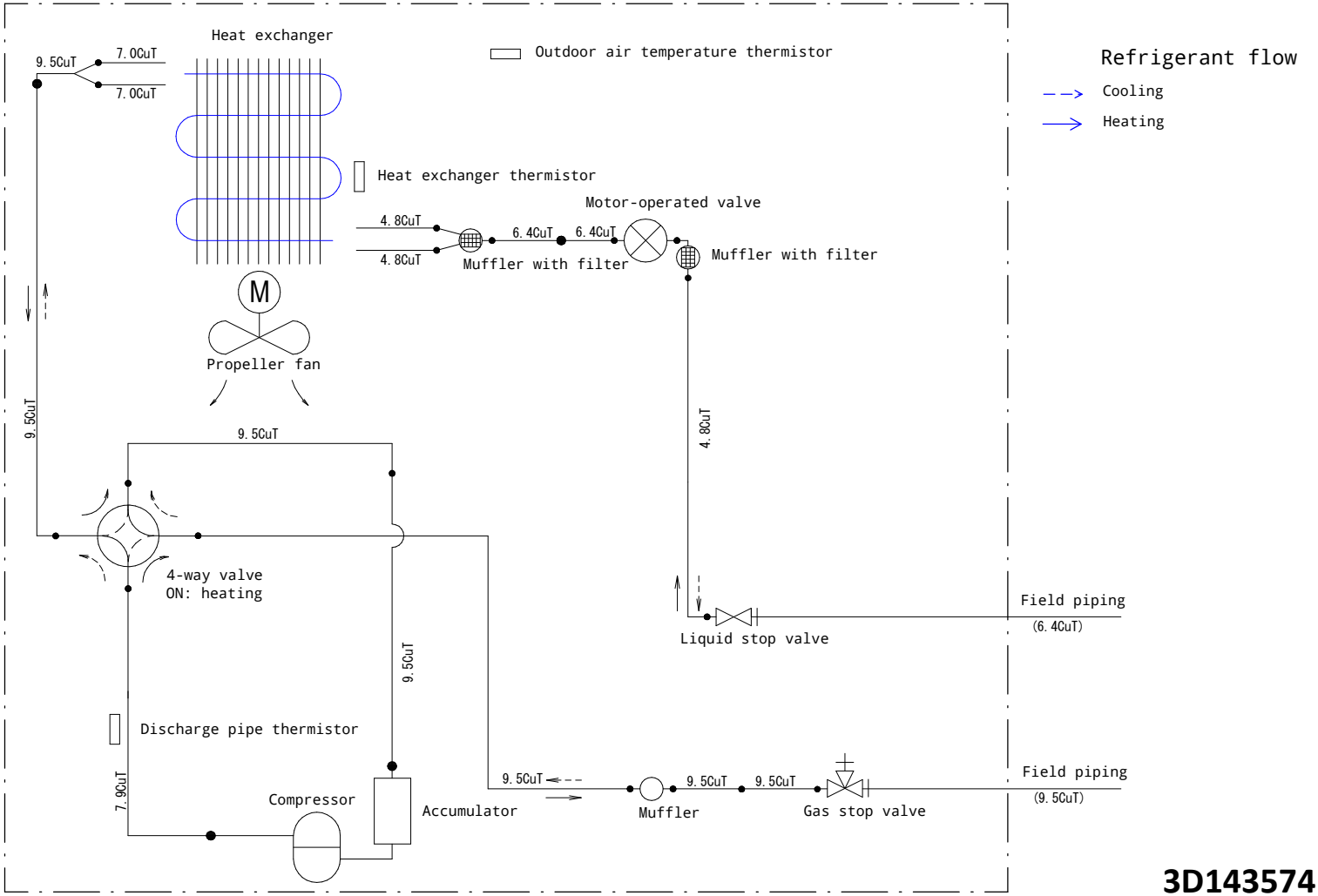

3D143574