Wiring diagram

Field wiring

For the power requirements, refer to the nameplate.

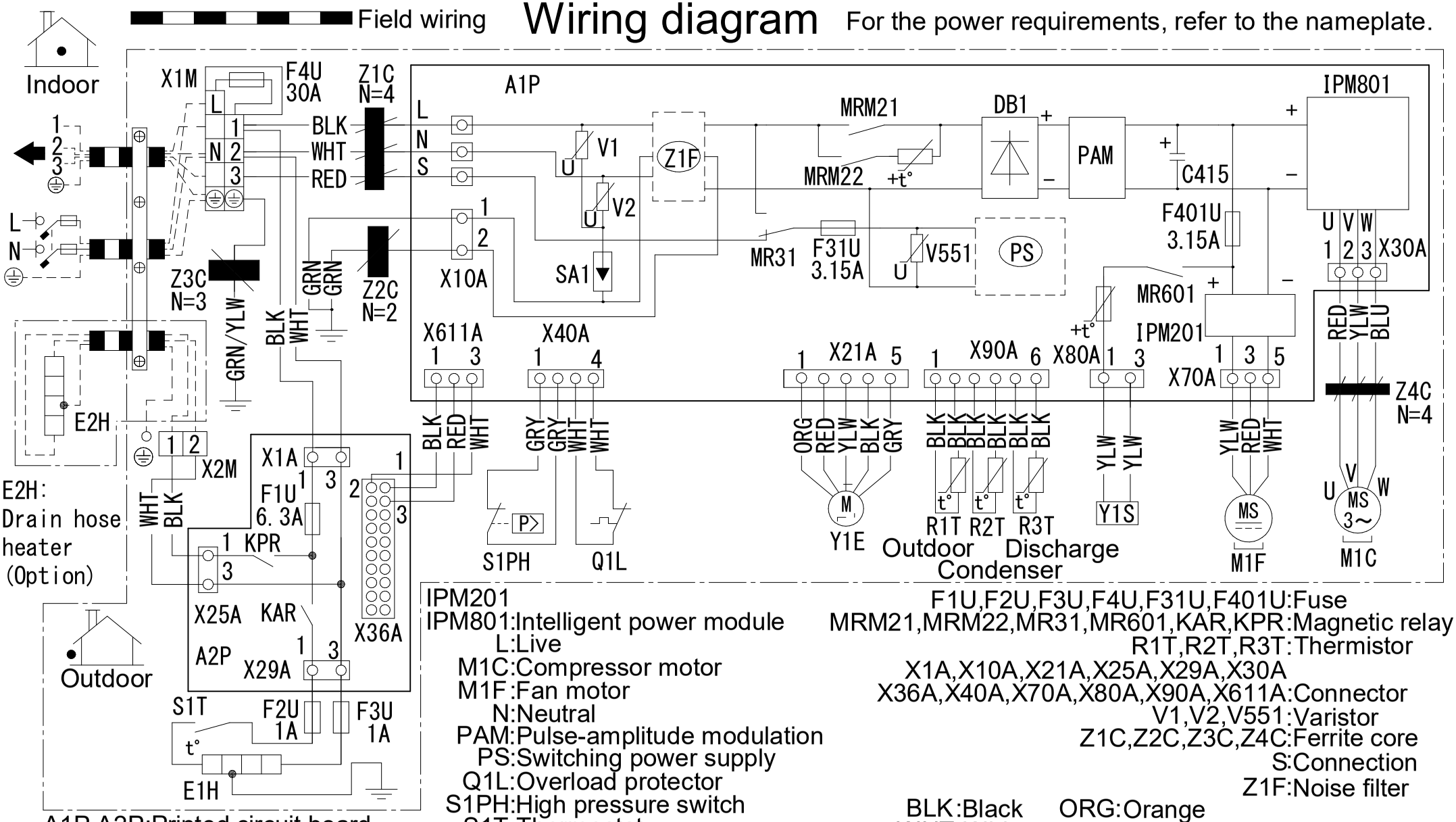

A1P,A2P:Printed circuit board
C415:Capacitor
DB1:Diode bridge
E1H:Drain pan heater
E2H:Drain hose heater

IPM201
IPM801:Intelligent power module
L:Live
M1C:Compressor motor
M1F:Fan motor
N:Neutral
PAM:Pulse-amplitude modulation
PS:Switching power supply
Q1L:Overload protector
S1PH:High pressure switch
S1T:Thermostat
SA1:Surge arrestor
X1M,X2M:Terminal strip
Y1E:Electronic expansion valve coil
Y1S:Reversing solenoid valve coil

F1U,F2U,F3U,F4U,F31U,F401U:Fuse
MRM21,MRM22,MR31,MR601,KAR,KPR:Magnetic relay
R1T,R2T,R3T:Thermistor
X1A,X10A,X21A,X25A,X29A,X30A
X36A,X40A,X70A,X80A,X90A,X611A:Connector
V1,V2,V551:Varistor
Z1C,Z2C,Z3C,Z4C:Ferrite core
S:Connection
Z1F:Noise filter

BLK:Black
WHT:White
BRN:Brown
RED:Red
GRN:Green
YLW:Yellow
ORG:Orange
BLU:Blue
GRY:Grey
⏚:Protective earth
⏚:Earth