ATXF20-42F
ATXF25-35G
CTXF20-35F
FTXF20-50F

Wiring diagram

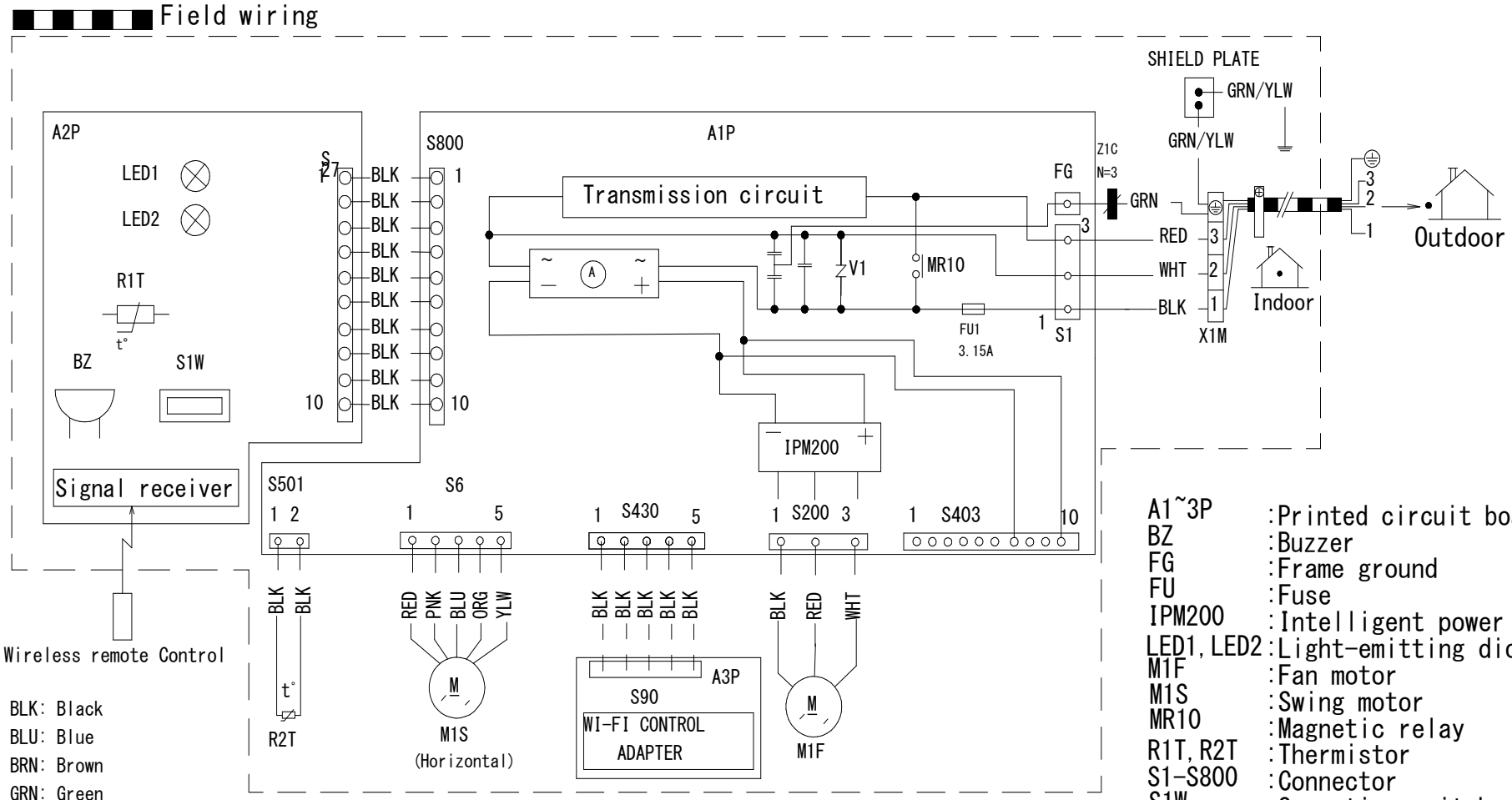

BLK: Black
BLU: Blue
BRN: Brown
GRN: Green
ORG: Orange
PNK: Pink
RED: Red
WHT: White
YLW: Yellow

A1~3P	:Printed circuit board
BZ	:Buzzer
FG	:Frame ground
FU	:Fuse
IPM200	:Intelligent power module
LED1, LED2	:Light-emitting diode
M1F	:Fan motor
M1S	:Swing motor
MR10	:Magnetic relay
R1T, R2T	:Thermistor
S1-S800	:Connector
S1W	:Operation switch
V1	:Varistor
X1M	:Terminal strip
Z1C	:Ferrite core
⏚	:Protective earth
⏚	:Earth
(A)	:Rectifier

Caution
When the main power is turned off and then back on again, operation will resume automatically.

NOTES
:
1. SIZE : LENGTH 70 x WIDTH 120
2. UNLESS OTHERWISE SPECIFIED REFER TO PURCHASING SPECIFICATION AS303002.

3D153085A