ATXP20-35P

Wiring diagram

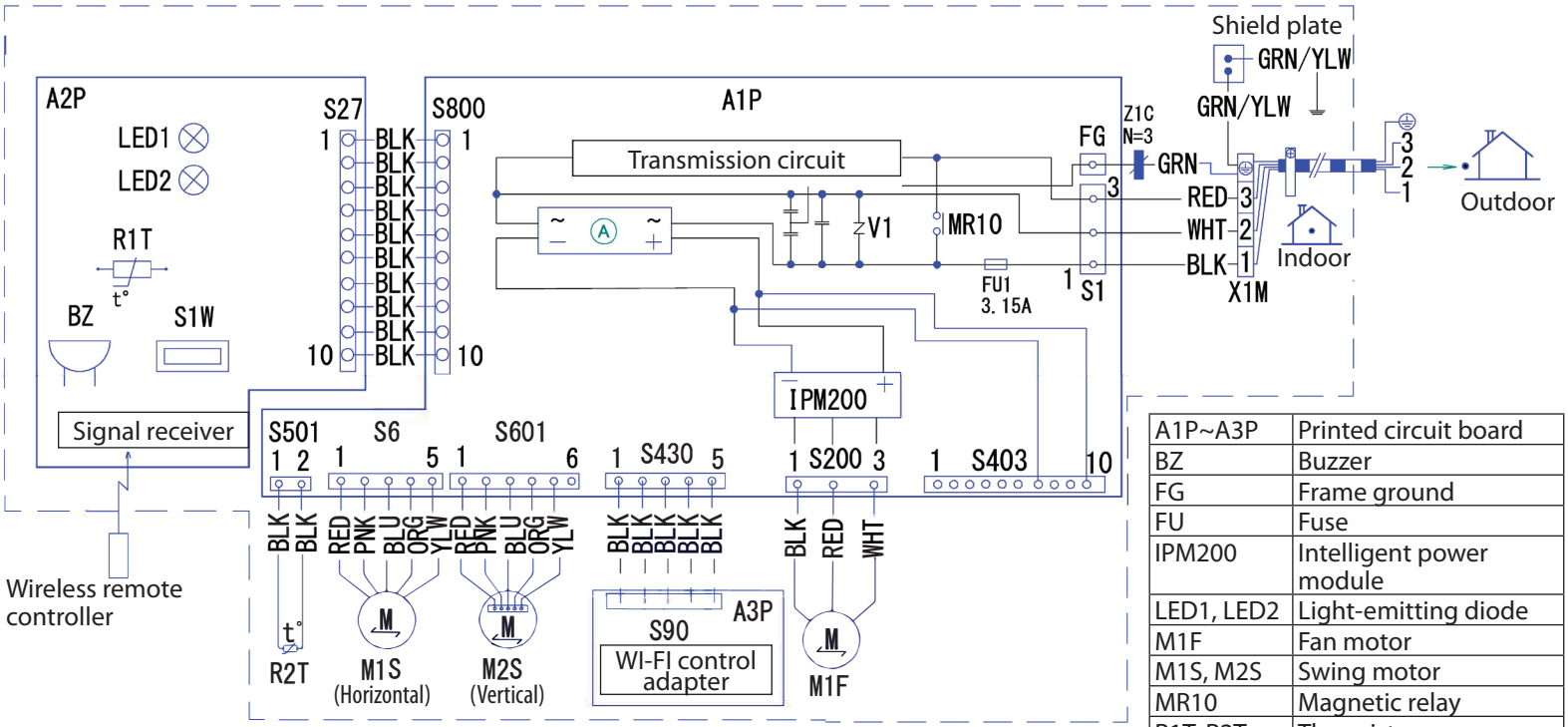

: Field wiring

BLK	: Black
BLU	: Blue
BRN	: Brown
GRN	: Green
ORG	: Orange
PNK	: Pink
RED	: Red
WHT	: White
YLW	: Yellow

CAUTION

When the main power is turned off and then back on again, operation will resume automatically.

NOTES

1. Size: length 70 x width 120
2. Unless otherwise specified refer to purchasing specification AS303002.

A1P~A3P	Printed circuit board
BZ	Buzzer
FG	Frame ground
FU	Fuse
IPM200	Intelligent power module
LED1, LED2	Light-emitting diode
M1F	Fan motor
M1S, M2S	Swing motor
MR10	Magnetic relay
R1T, R2T	Thermistor
S1-S8000	Connector
S1W	Operation switch
V1	Varistor
X1M	Terminal strip
Z1C	Ferrite core
⏚	Protective earth
⏚	Earth
Ⓐ	Rectifier

3D142360