CVXM-B
FVXM-B
FVXTM-B

Wiring diagram

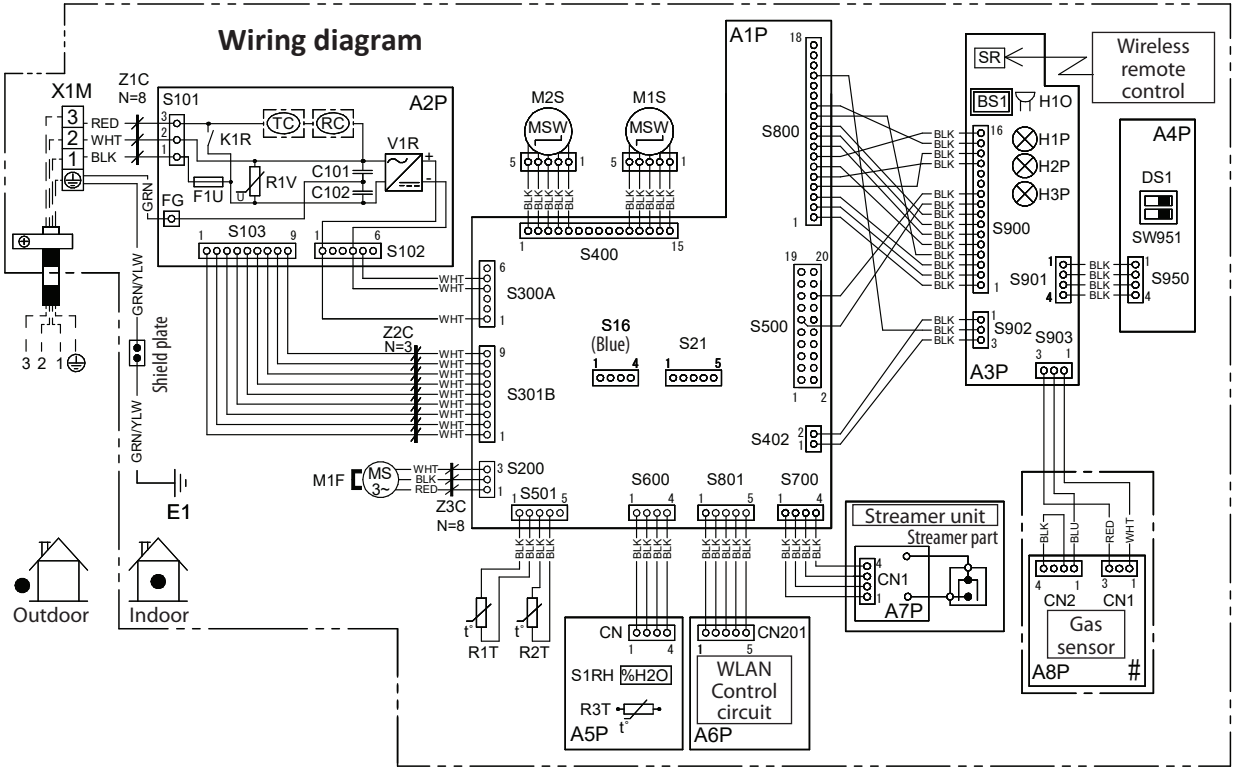

Wire colors

BLK	: Black
YLW	: Yellow
RED	: Red
GRN	: Green
WHT	: White
GRN/YLW	: Green/yellow

Field wiring :

CAUTION

When the power turns back on after a power break, the previously selected mode will be resumed.

NOTE

Applicable for units with refrigerant leakage sensor only

CN, CN1, CN2, CN201 S16~950, FG	Connector
X1M	Terminal block
F1U	Fuse (T, 3.15A, 250V)
M1F	Motor (indoor fan)
M1S	Motor (swing flap)
M2S	Motor (damper)
A1~8P	Printed circuit
R1~3T	Thermistor
BS1	Button switch
H1~3P	Pilot lamp
SR	Signal receiver
H1O	Buzzer

S1RH	Humidity sensor
Z1~3C	Ferrite core
E1	Heat exchanger
K1R	Magnetic relay
V1R	Rectifier
C101, C102	Capacitor
TC	Transmitter circuit
RC	Receiver circuit
⏚	Protective earth
R1V	Varistor
DS1	Dip switch