ARXS50G

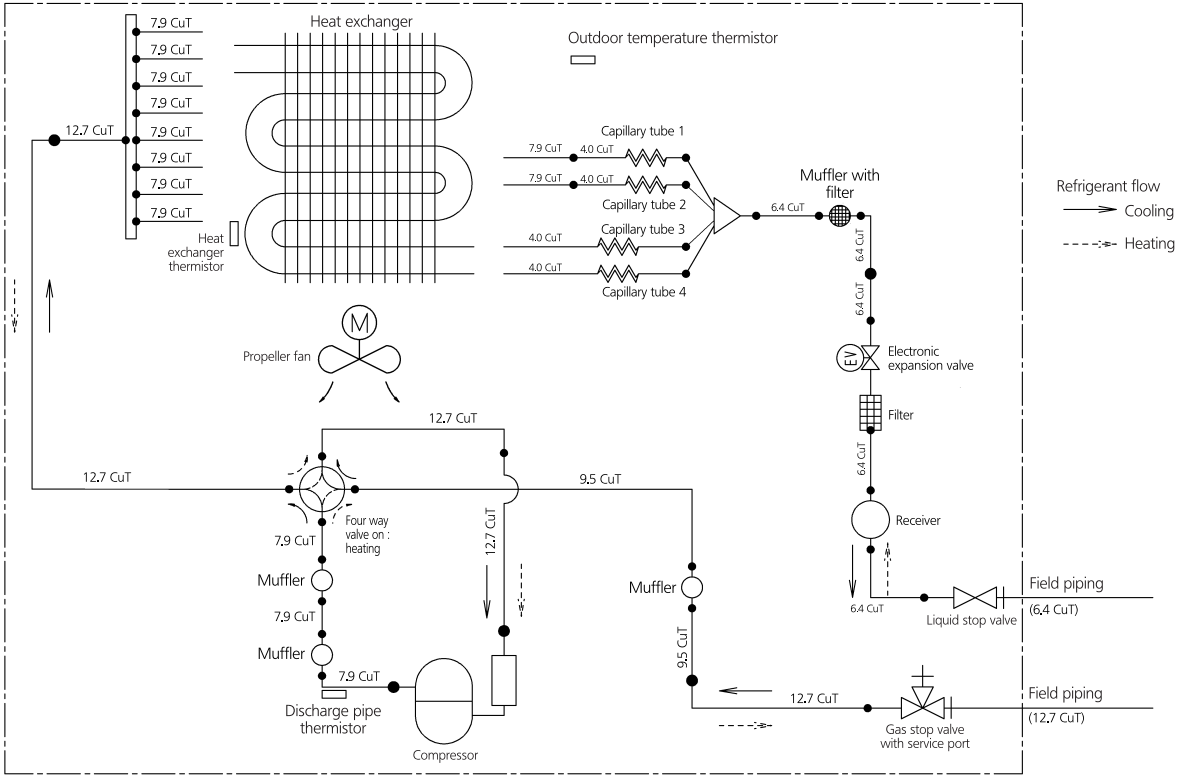

3D051637X