ARXS50G

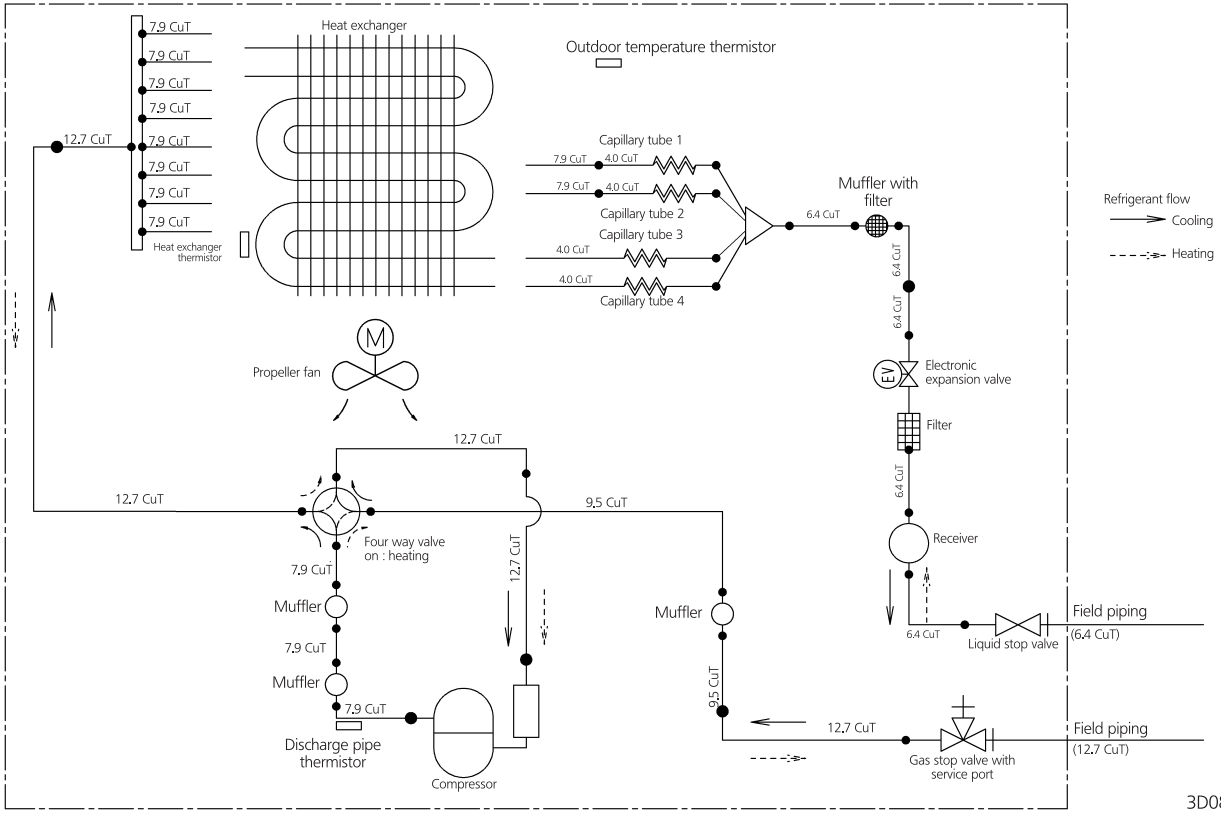

3D080605