ARXS50G

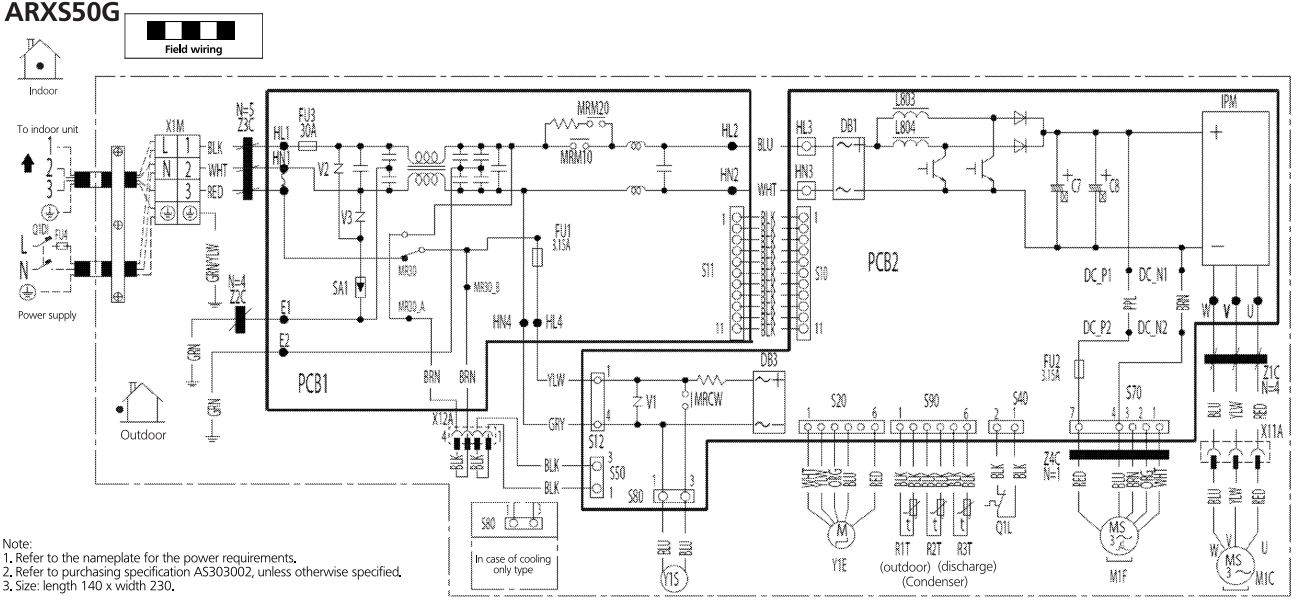

Note:
1. Refer to the nameplate for the power requirements.
2. Refer to purchasing specification AS303002, unless otherwise specified.
3. Size: length 140 x width 230.

C7,C8	: Capacitor
DB1,DB3	: Diode bridge
FU1,FU2,FU3	: Fuse
FU4	: Field fuse
IPM	: Intelligent power module
L	: Live
L803,L804	: Reactor
M1C	: Compressor motor
M1F	: Fan motor
MRCW,MRM10, MRM20,MR30, MR30_A,MR30_B	: Magnetic relay
N	: Neutral
Q1L	: Overload protector
Q1DI	: Earth leak detector
PCB1,PCB2	: Printed circuit board
S10,S11,S12,S20 S40,S50,S70,S80,S90	
HL3,HN3,X11A,X12A	: Connector
R1T,R2T,R3T	: Thermistor
SA1	: Surge absorber
V1,V2,V3	: Varistor
X1M	: Terminal strip
Y1E	: Electronic expansion valve coil
Y1S	: Reversing solenoide valve coil
Z1C,Z2C,Z3C,Z4C	: Ferrite core
⏚	: Protective earth
⏚	: Earth