FTXS50-71F

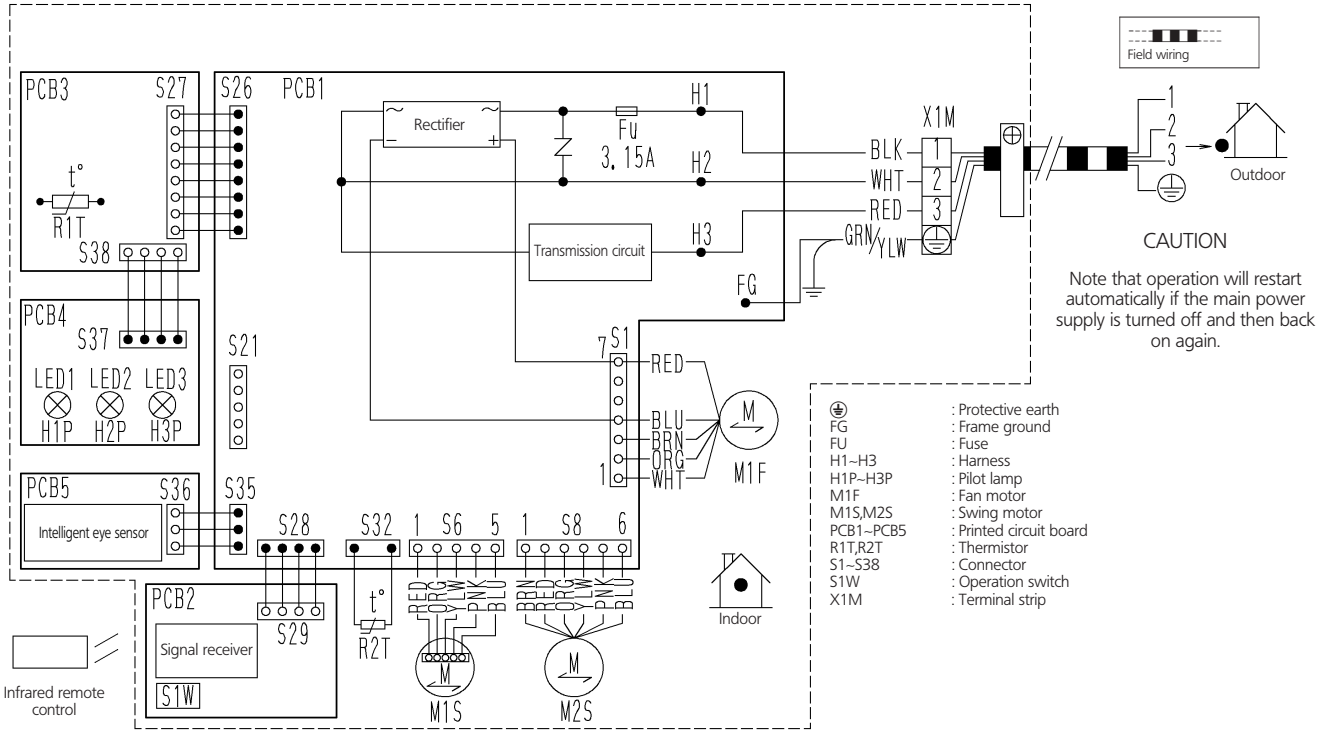
PCB3
S27
t°
R1T
S38
PCB4
S37
LED1 LED2 LED3
H1P H2P H3P
PCB5
S36
Intelligent eye sensor
S26
PCB1
Rectifier
Fu
3, 15A
H1
H2
H3
Transmission circuit
FG
S21
S35
S28
S32
S6
S8
PCB2
S29
Signal receiver
S1W
Infrared remote control
R2T
M1S
M2S
S1
RED
BLU
BRN
ORG
WHT
M1F
X1M
BLK
WHT
RED
GRN/YLW
Field wiring
Outdoor
Indoor
CAUTION
Note that operation will restart automatically if the main power supply is turned off and then back on again.
: Protective earth
FG : Frame ground
FU : Fuse
H1~H3 : Harness
H1P~H3P : Pilot lamp
M1F : Fan motor
M1S,M2S : Swing motor
PCB1~PCB5 : Printed circuit board
R1T,R2T : Thermistor
S1~S38 : Connector
S1W : Operation switch
X1M : Terminal strip