RXS50K

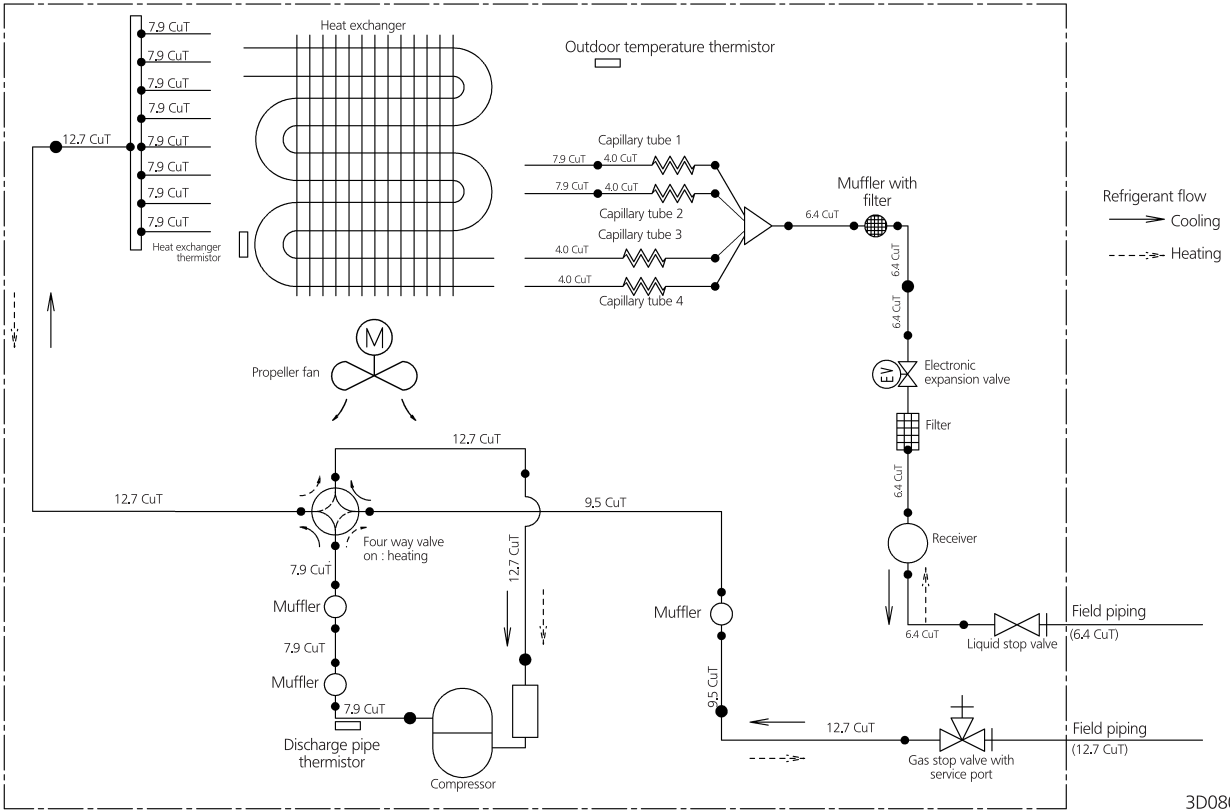

3D080605