# ARXS25-35G

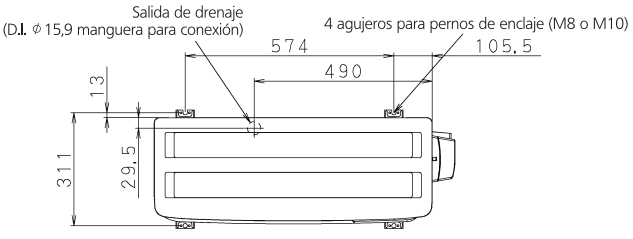


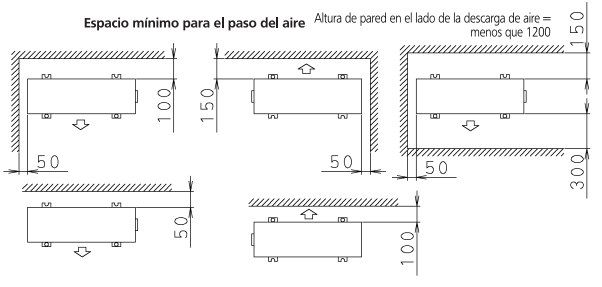


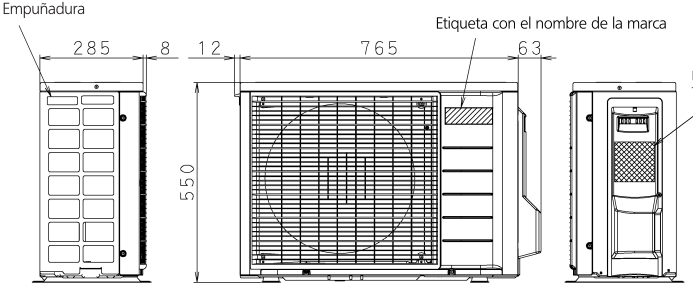


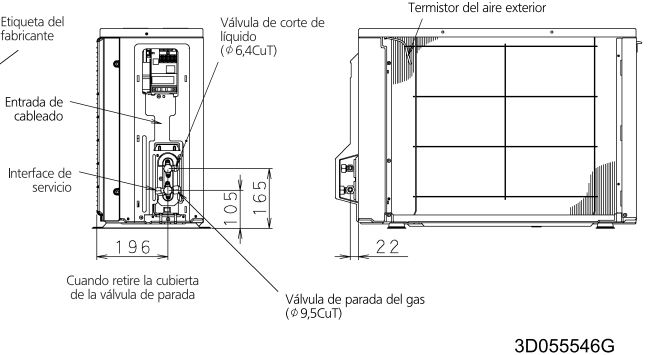


3D055546G