FTXS50-71F

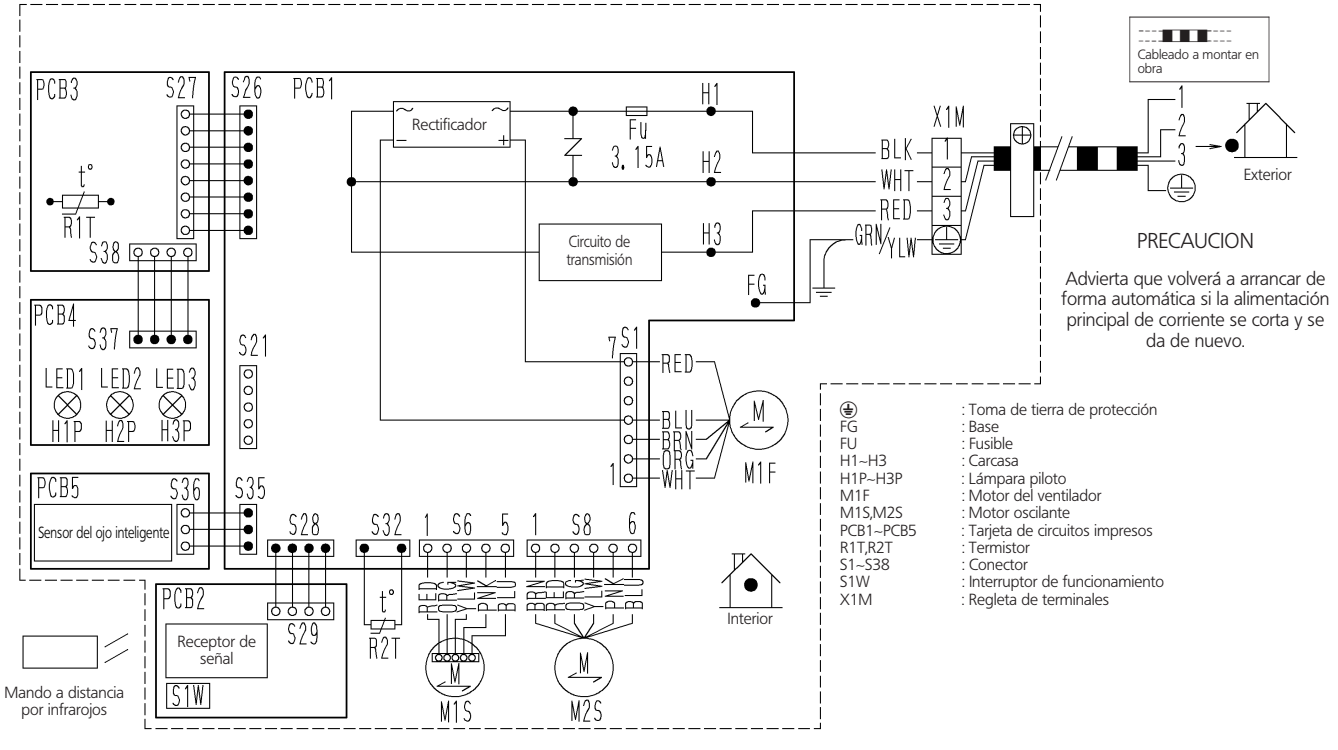

3D038530R