RX50K

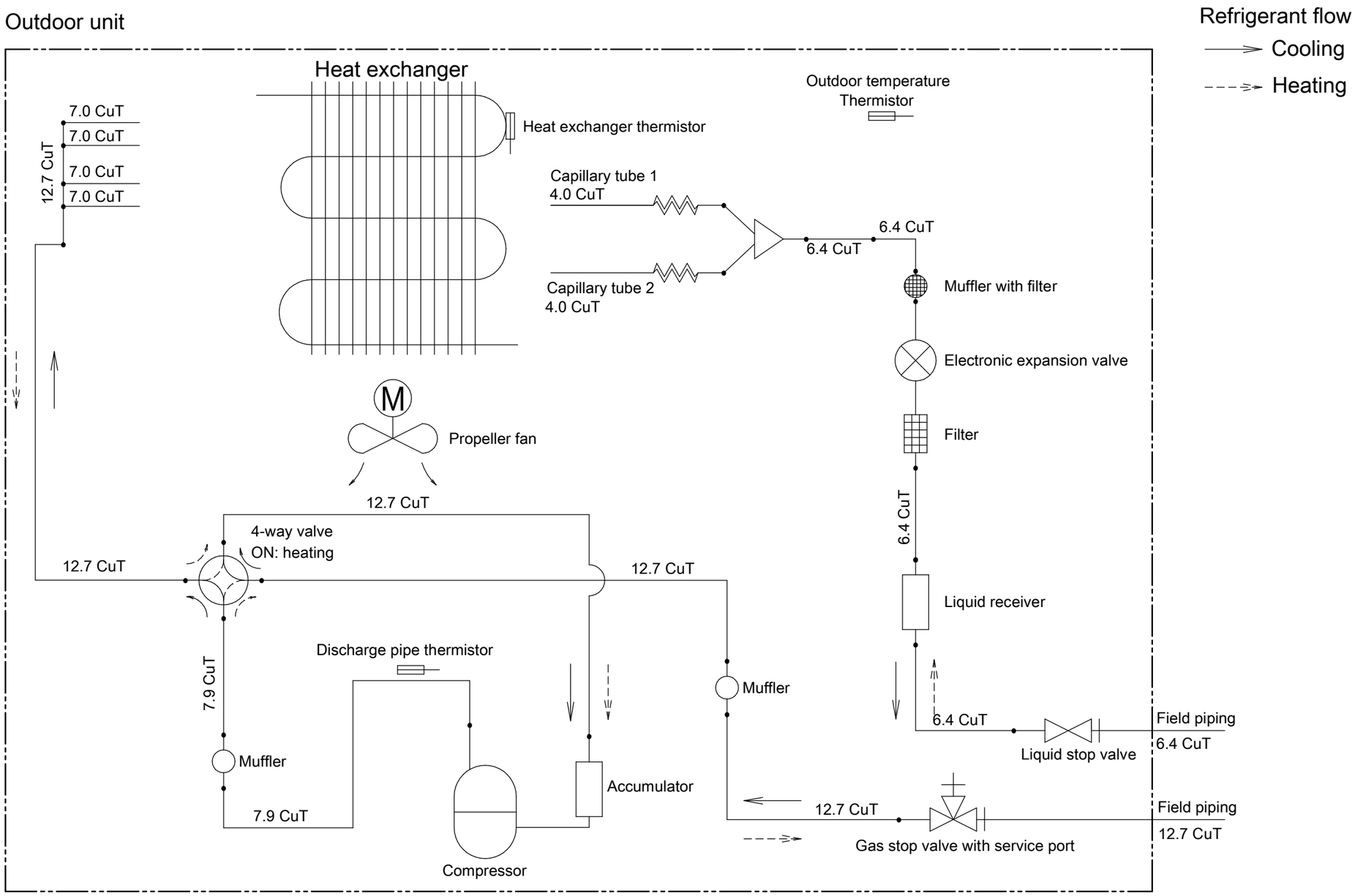
Outdoor unit
Refrigerant flow
Cooling
Heating
Heat exchanger
Heat exchanger thermistor
Outdoor temperature Thermistor
7.0 CuT
7.0 CuT
7.0 CuT
7.0 CuT
12.7 CuT
Capillary tube 1
4.0 CuT
Capillary tube 2
4.0 CuT
6.4 CuT
6.4 CuT
Muffler with filter
Electronic expansion valve
Filter
6.4 CuT
Liquid receiver
M
Propeller fan
12.7 CuT
4-way valve
ON: heating
12.7 CuT
12.7 CuT
Discharge pipe thermistor
7.9 CuT
Muffler
Muffler
6.4 CuT
Field piping
6.4 CuT
Liquid stop valve
Accumulator
7.9 CuT
12.7 CuT
Field piping
12.7 CuT
Gas stop valve with service port
Compressor