RXA42-50B8

Model	øA	øB	C	D
RXA42B5V1B8	9.5	6.4	19	19
RXA50B5V1B8	12.7	6.4	19	20

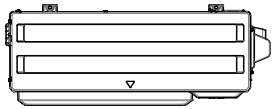

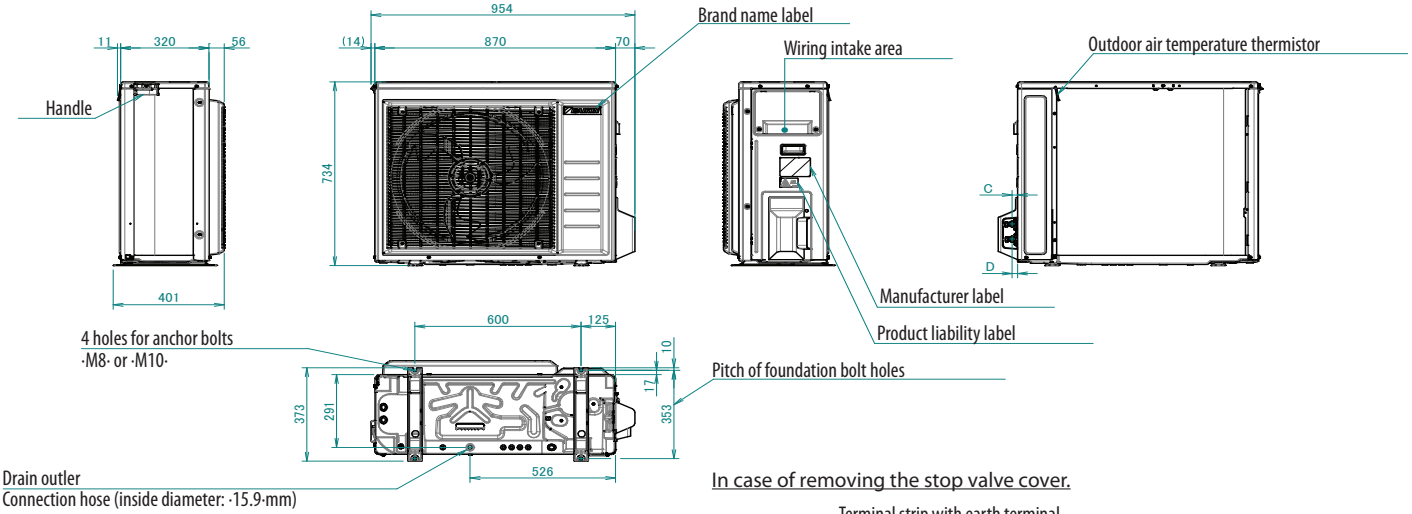

Minimum space for air passage

Wall height on air outlet side < 1200 mm

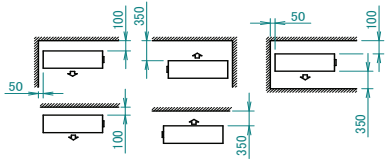

In case of removing the stop valve cover.

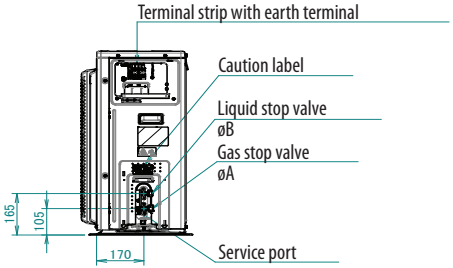

3D151857