RXJ20-35A

Wiring diagram

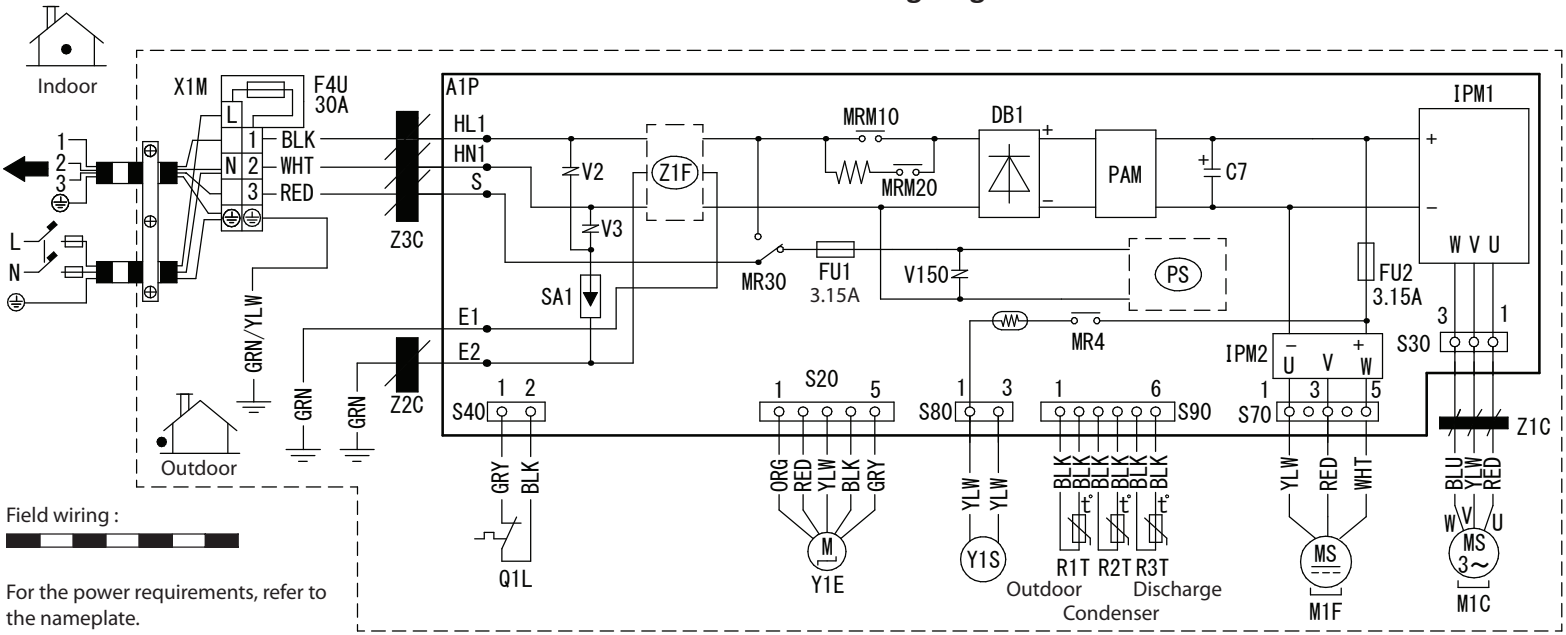

Field wiring :

For the power requirements, refer to the nameplate.

Wire colors

BLK	: Black
WHT	: White
BRN	: Brown
RED	: Red
GRN	: Green
YLW	: Yellow
ORG	: Orange
BLU	: Blue
GRU	: Grey

C7	Capacitor
DB1	Diode bridge
IPM1, IPM2	Intelligent power module
L	Live
M1C	Compressor motor
M1F	Fan motor
N	Neutral
PAM	Pulse-amplitude modulation
A1P	Printed circuit board
PS	Switching power supply
Q1L	Overload protector
SA1	Surge arrester
X1M	Terminal strip

Y1E	Electronic expansion valve coil
Y1S	Reversing solenoid valve coil
FU1, FU2, F4U	Fuse
MR4, MR30, MRM10, MRM20	Magnetic relay
R1T, R2T, R3T	Thermistor
S20, S30, S40, S70, S80, S90	Connector
V2, V3, V150	Varistor
Z1C, Z2C, Z3C	Ferrite core
Z1F	Noise filter
⏚	Protective earth
⏚	Earth