RXJ20-35A9

Wiring diagram

For the power requirements, refer to the nameplate.

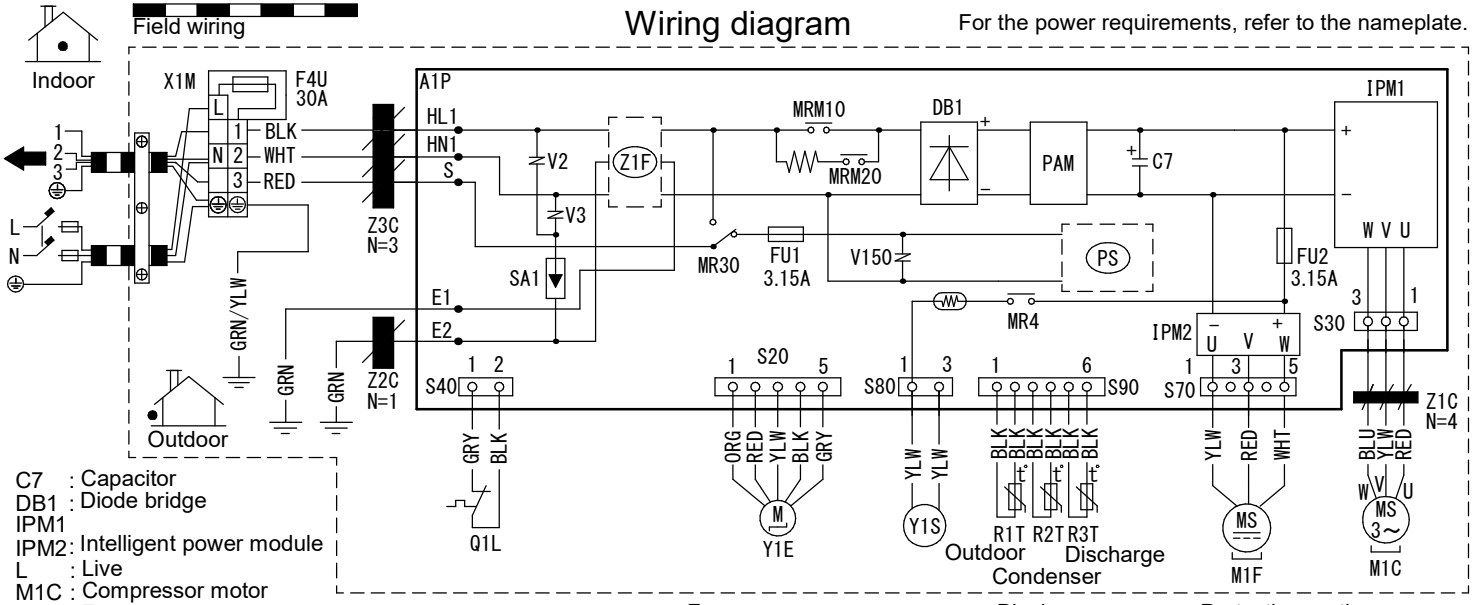

C7 : Capacitor
DB1 : Diode bridge
IPM1
IPM2 : Intelligent power module
L : Live
M1C : Compressor motor
M1F : Fan motor
N : Neutral
PAM : Pulse-amplitude modulation
A1P : Printed circuit board
PS : Switching power supply
Q1L : Overload protector
SA1 : Surge arrestor
X1M : Terminal strip
Y1E : Electronic expansion valve coil
Y1S : Reversing solenoid valve coil

FU1,FU2,F4U : Fuse
MR4,MR30
MRM10,MRM20 : Magnetic relay
R1T,R2T,R3T : Thermistor
S20,S30,S40,S70
S80,S90 : Connector
V2,V3,V150 : Varistor
Z1C,Z2C,Z3C : Ferrite core
Z1F : Noise filter

BLK : Black
WHT : White
RED : Red
GRN : Green
YLW : Yellow
ORG : Orange
BLU : Blue
GRY : Grey

⏚ : Protective earth
⏚ : Earth

Notes

1. Size: ·140 x 80·
2. Refer to purchasing specification ·AS303002·, unless otherwise specified.

3D153803