RXM71N

Wiring diagram

For the power requirements, refer to the nameplate.

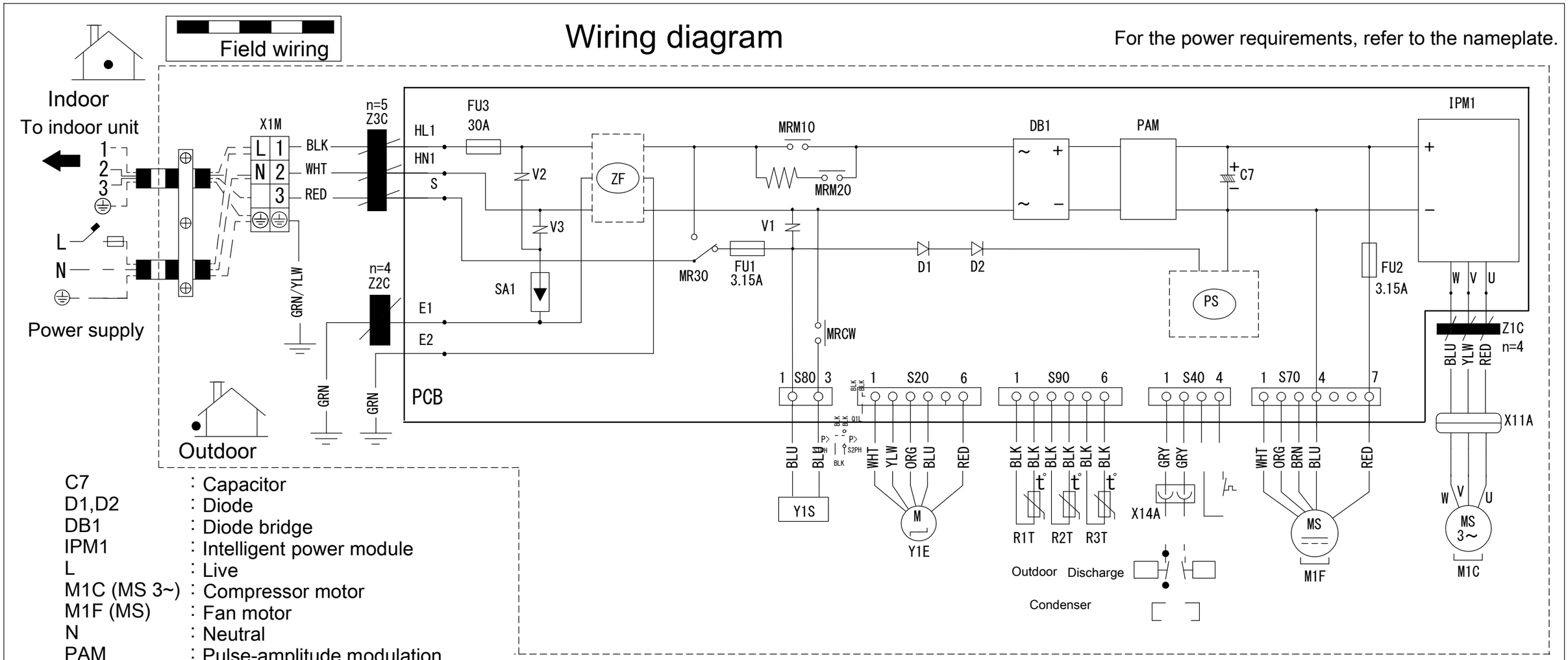

C7	: Capacitor
D1,D2	: Diode
DB1	: Diode bridge
IPM1	: Intelligent power module
L	: Live
M1C (MS 3~)	: Compressor motor
M1F (MS)	: Fan motor
N	: Neutral
PAM	: Pulse-amplitude modulation
PCB	: Printed circuit board
PS	: Switching power supply
Q1L	: Overload protector
S1PH, S2PH	: High pressure switch
SA1	: Surge arrestor
X1M	: Terminal strip
Y1E (M)	: Electronic expansion valve coil
Y1S	: Reversing solenoid valve coil
ZF	: Noise filter

FU1, FU2, FU3	: Fuse
MR30, MRM10, MRM20, MRCW	: Magnetic relay
R1T, R2T, R3T	: Thermistor
S20, S40, S70, S80, S90, X11A, X14A	: Connector
V1, V2, V3	: Varistor
Z1C, Z2C, Z3C	: Ferrite core
HL1, HN1, S, E1, E2, W, V, U	: Connection

GRY	: Grey
BLK	: Black
WHT	: White
BRN	: Brown
RED	: Red
GRN	: Green
YLW	: Yellow
ORG	: Orange
BLU	: Blue
n=4, n=5	: Number of passes through ferrite core

⏚ : Protective earth
⏚ : Earth

Notes

1. Size: length 105 X width 185.
2. Refer to purchasing specification AS(Y)303002, unless otherwise specified.

3D100894C