RXP50K3

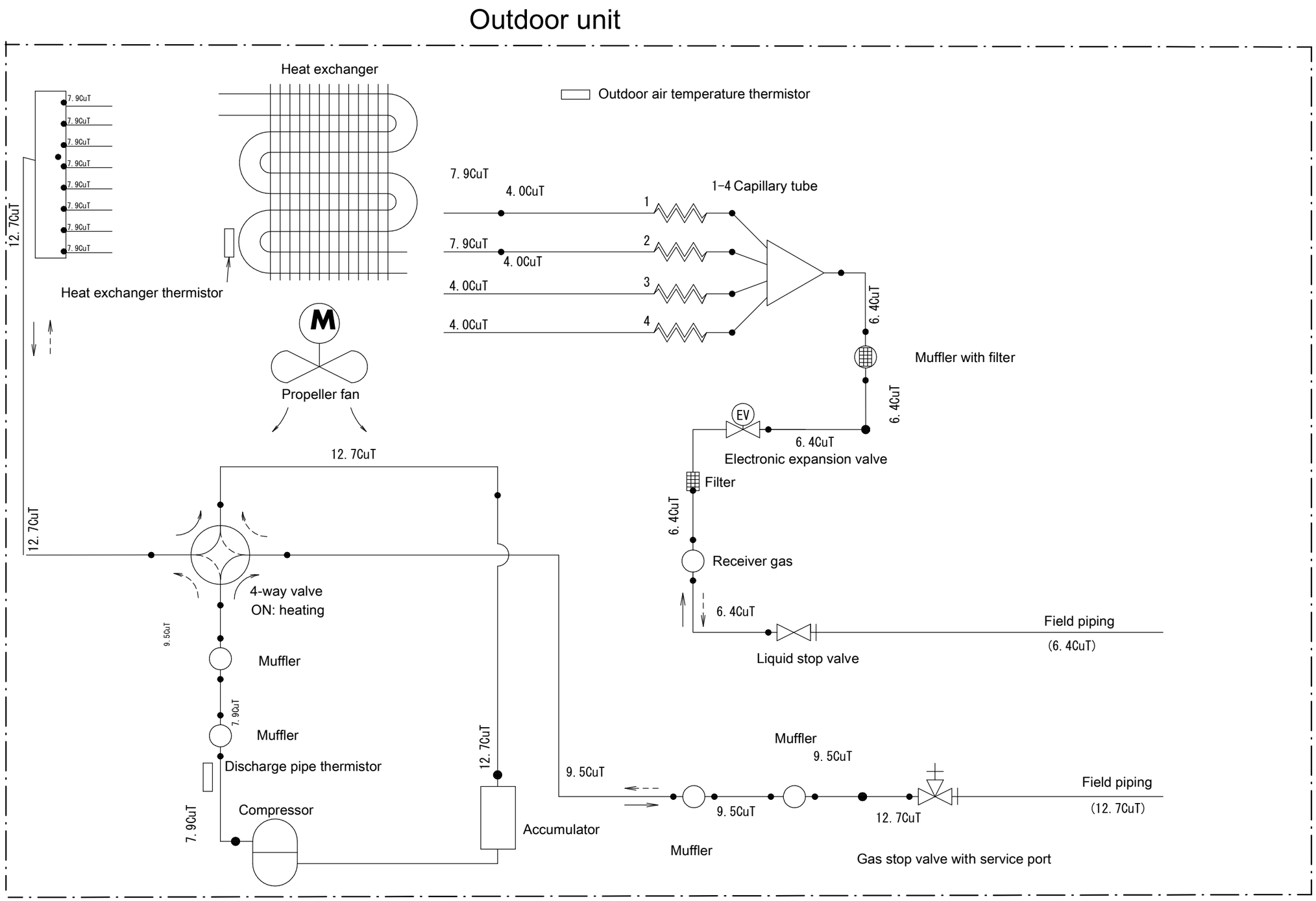

Refrigerant flow

- - - → Cooling

——→ Heating

3D092010C