Wiring diagram

For the power requirements, refer to the nameplate.

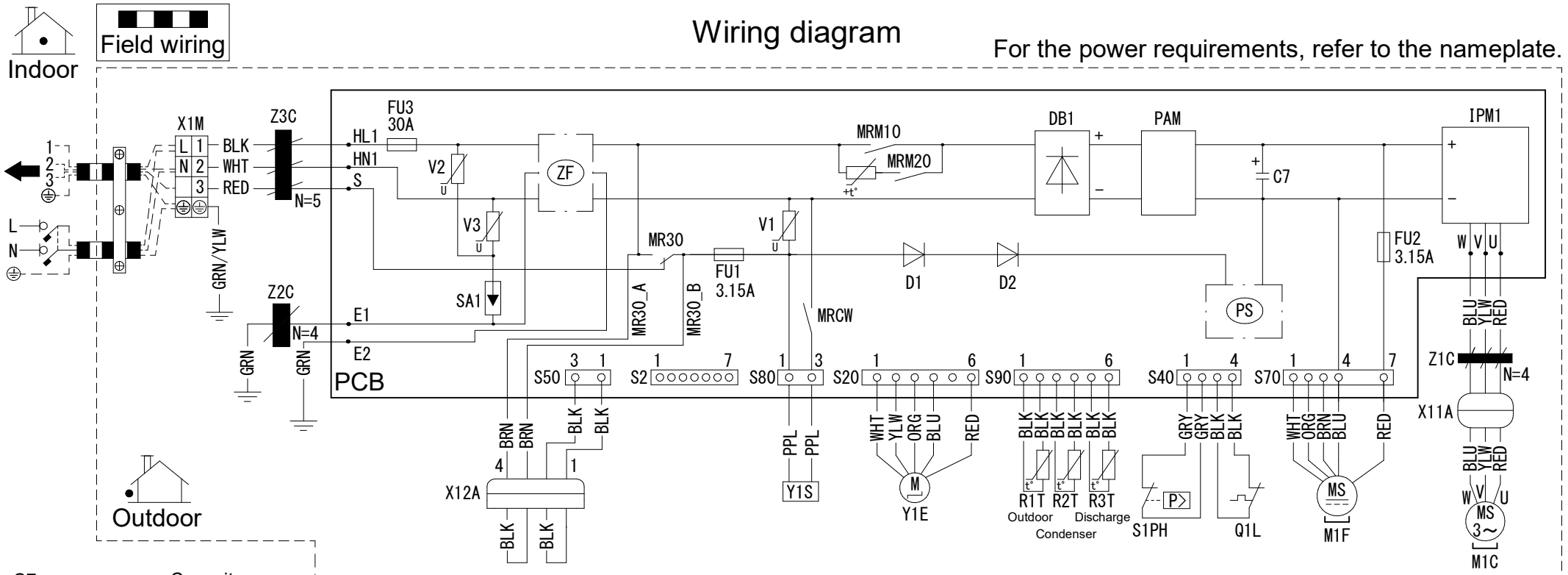

C7	: Capacitor
D1, D2	: Diode
DB1	: Diode bridge
E1, E2, HL1, HN1,S, U, V, W	: Connection
FU1, FU2, FU3	: Fuse
IPM1	: Intelligent power module
L	: Live
M1C	: Compressor motor
M1F	: Fan motor
MR30, MRCW, MRM10, MRM20	: Magnetic relay
N	: Neutral
N=4, N=5	: Number of passes
PAM	: Pulse-amplitude modulation
PCB	: Printed circuit board
PS	: Switching power supply
Q1L	: Overload protector
R1T, R2T, R3T	: Thermistor
S1PH	: High pressure switch
S2, S20, S40, S 50,S70,S80,S90	: Terminal connector
SA1	: Surge arrestor
V1, V2, V3	: Varistor
X11A, X12A	: Connector
X1M	: Terminal strip
Y1E	: Electronic expansion valve coil
Y1S	: Reversing solenoid valve coil
Z1C, Z2C, Z3C	: Ferrite core
ZF	: Noise filter
⏚	: Earth
⏚	: Protective earth

BLK	: Black
BLU	: Blue
BRN	: Brown
GRN	: Green
GRY	: Grey
ORG	: Orange
RED	: Red
WHT	: White
YLW	: Yellow
PPL	: Purple