BPMKS967A2

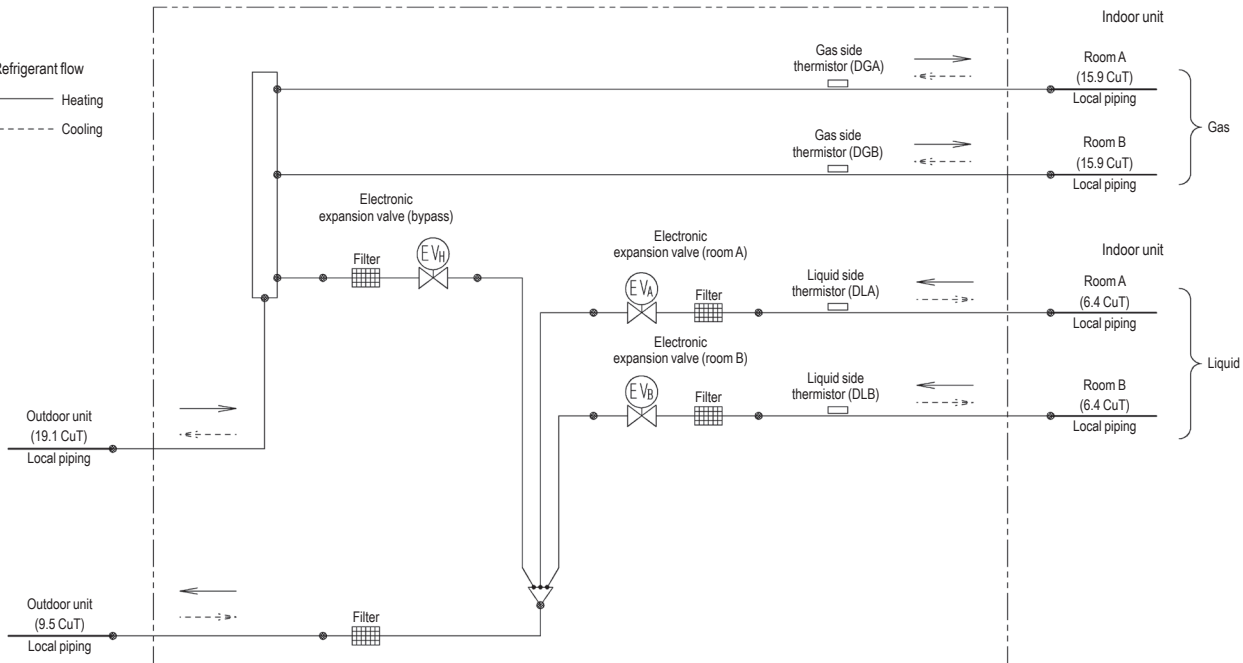

3D048286B