BPMKS967A3

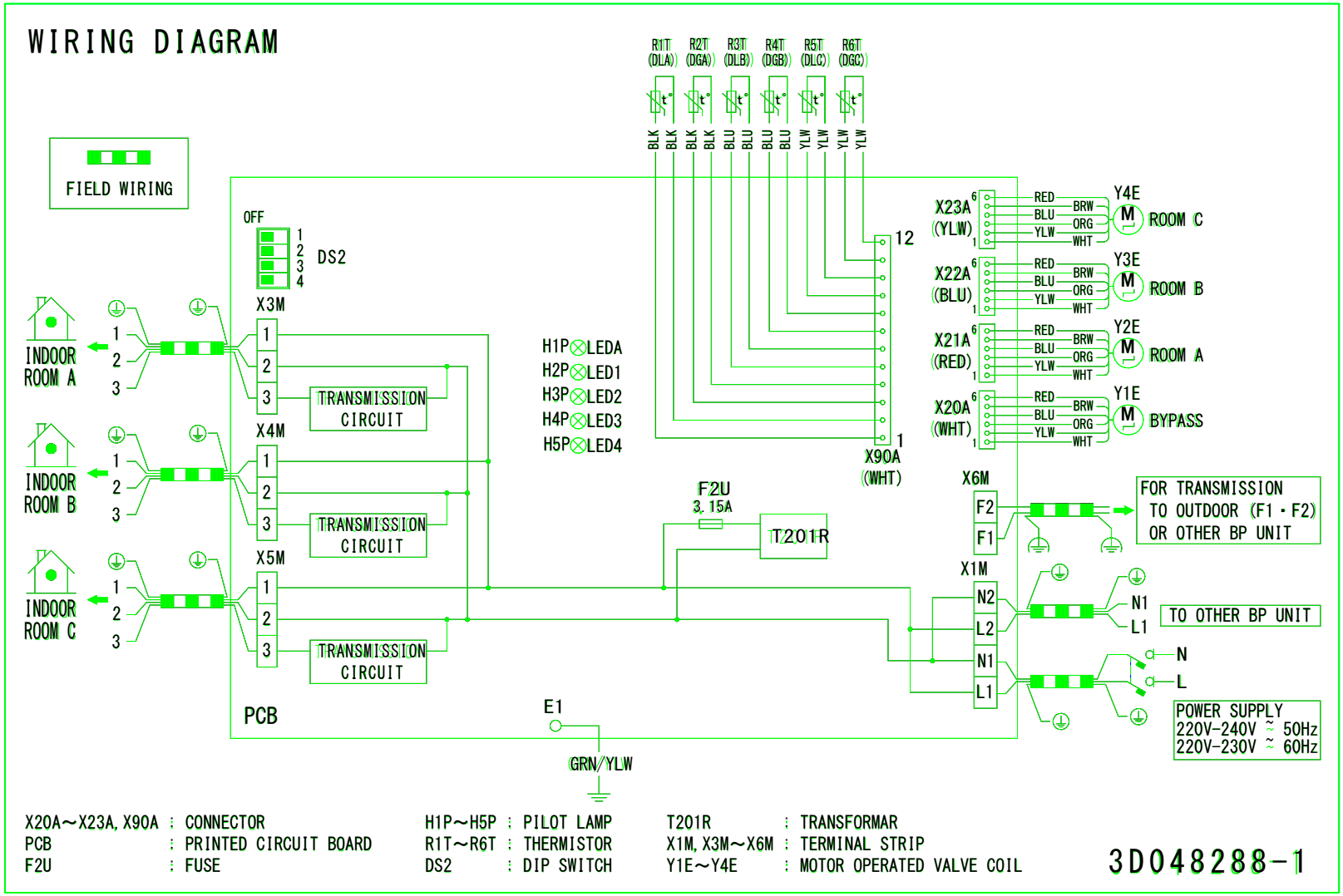

NOTE) 1. WIRING DIAGRAM NAMEPLATE SIZE : WIDTH 100 X LENGTH 150 mm
2. REFER TO AS(Y)303002 UNLESS OTHERWISE SPECIFIED
3. THIS DRAWING WAS DRAWN ON CAD SYSTEM

BRANCH PROVIDER UNIT

3D048288A