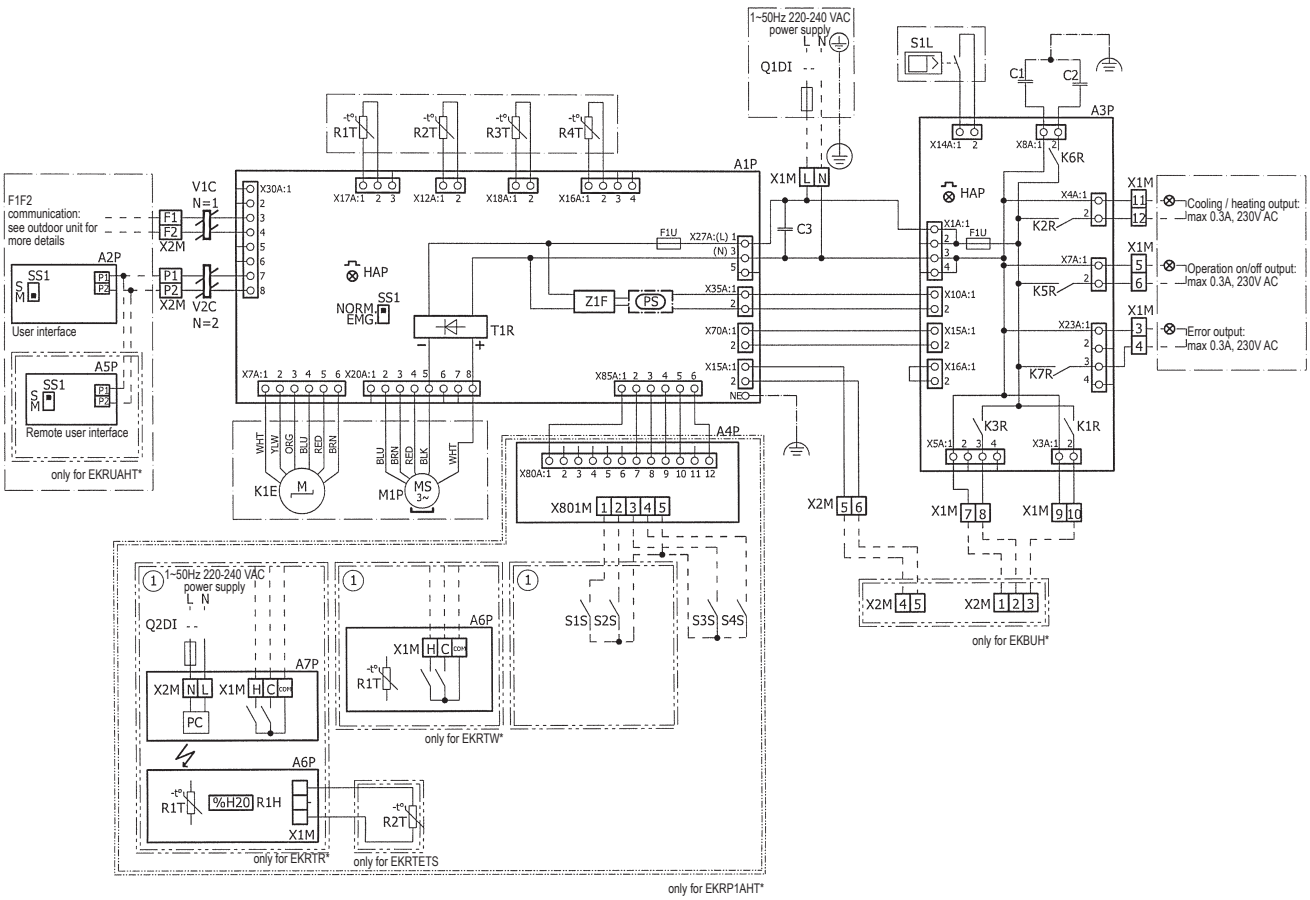
1~50Hz 220-240 VAC power supply
L N
Q1DI
S1L
C1
C2
A3P
X14A:1 2
X8A:1 2
K6R
HAP
X4A:1
K2R
X7A:1
K5R
X23A:1
K7R
X1A:1
F1U
X10A:1
X15A:1
X16A:1
K3R
K1R
X5A:1 2 3 4
X3A:1 2
X1M
Cooling / heating output: max 0.3A, 230V AC
Operation on/off output: max 0.3A, 230V AC
Error output: max 0.3A, 230V AC
R1T
R2T
R3T
R4T
A1P
X17A:1 2 3
X12A:1 2
X18A:1 2
X16A:1 2 3 4
X30A:1
F1F2
communication: see outdoor unit for more details
F1
F2
X2M
V1C
N=1
V2C
N=2
P1
P2
A2P
SS1
User interface
A5P
Remote user interface
only for EKRUAHT*
HAP
NORM
EMG
SS1
T1R
Z1F
PS
C3
X27A:(L) 1
(N) 3
5
X35A:1
X70A:1
X15A:1
NEO
X7A:1 2 3 4 5 6
X20A:1 2 3 4 5 6 7 8
X85A:1 2 3 4 5 6
WHT
YLW
ORG
BLU
RED
BRN
BLU
BRN
RED
BLK
WHT
K1E
M
M1P
MS 3~
A4P
X80A:1 2 3 4 5 6 7 8 9 10 11 12
X801M 1 2 3 4 5
X2M 5 6
X1M 7 8
X1M 9 10
X2M 4 5
X2M 1 2 3
only for EKBUH*
1~50Hz 220-240 VAC power supply
Q2DI
A7P
X2M N L
X1M H C COM
PC
A6P
R1T
%H20
R1H
X1M
only for EKRTR*
only for EKRTETS
only for EKRTW*
S1S S2S
S3S S4S
only for EKRP1AHT*