REYA14-20A9

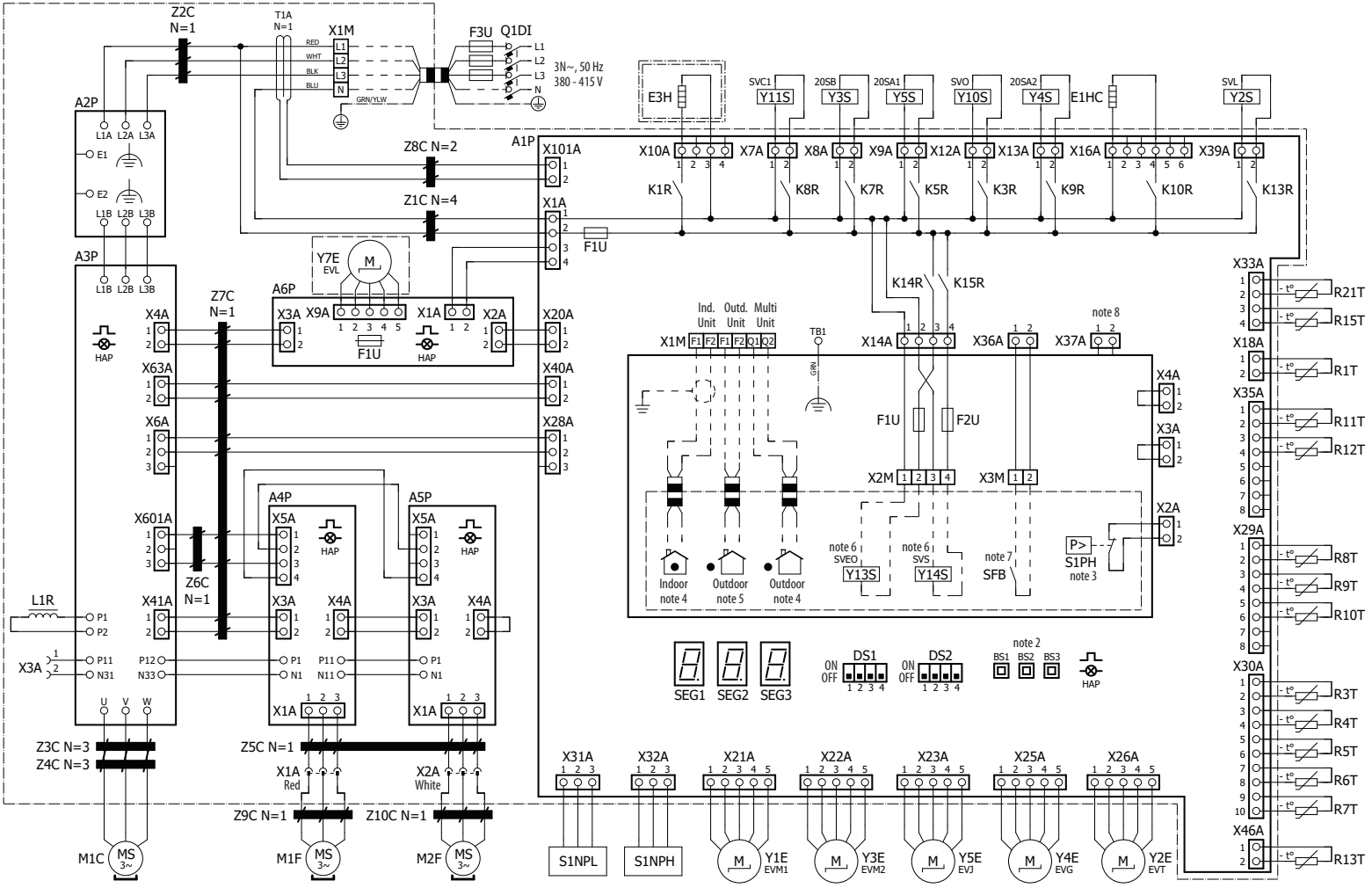

4D138281A