# REYA8-12A9
# REMA5A9

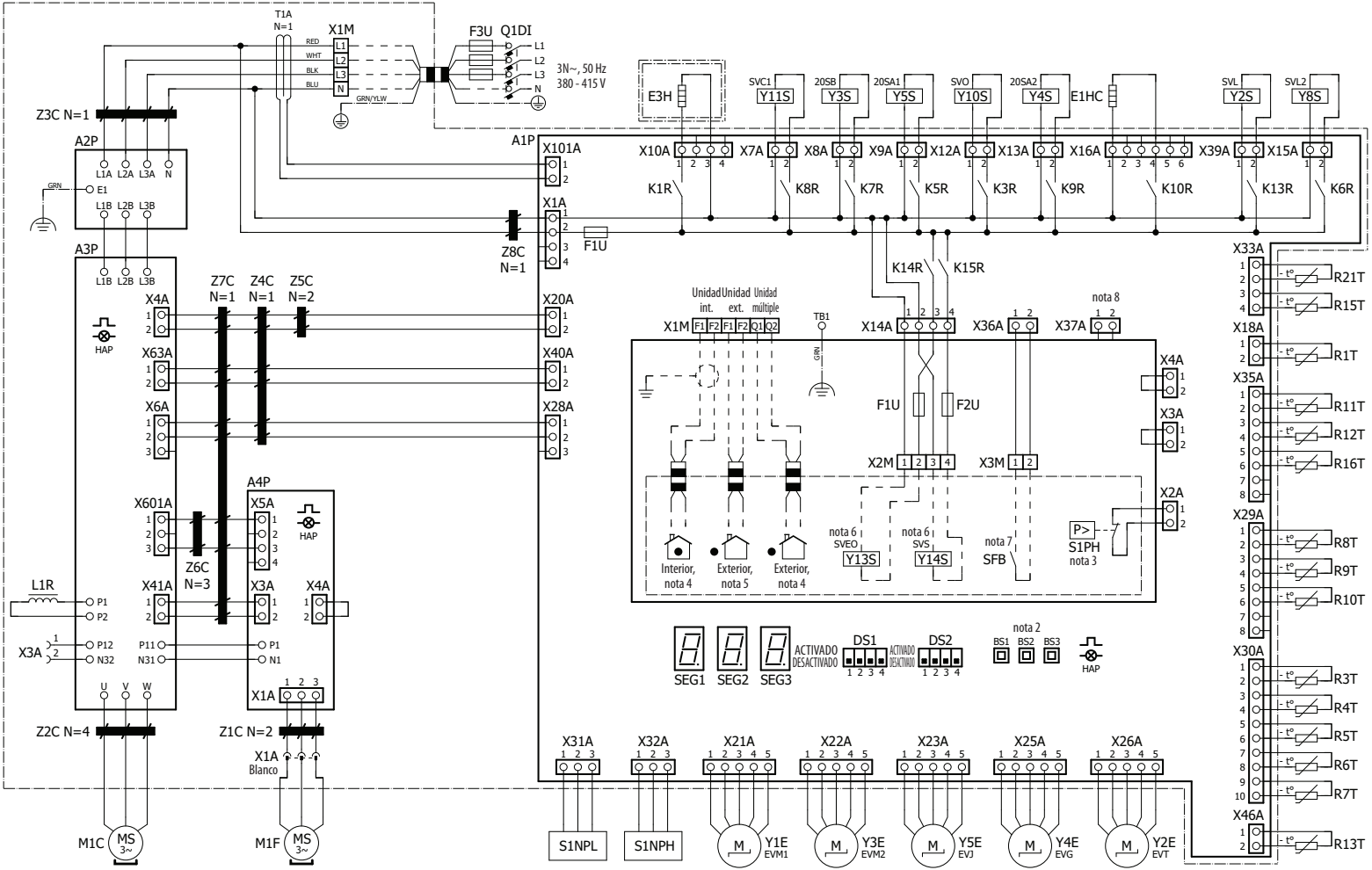


4D138280A