REYA14-20A

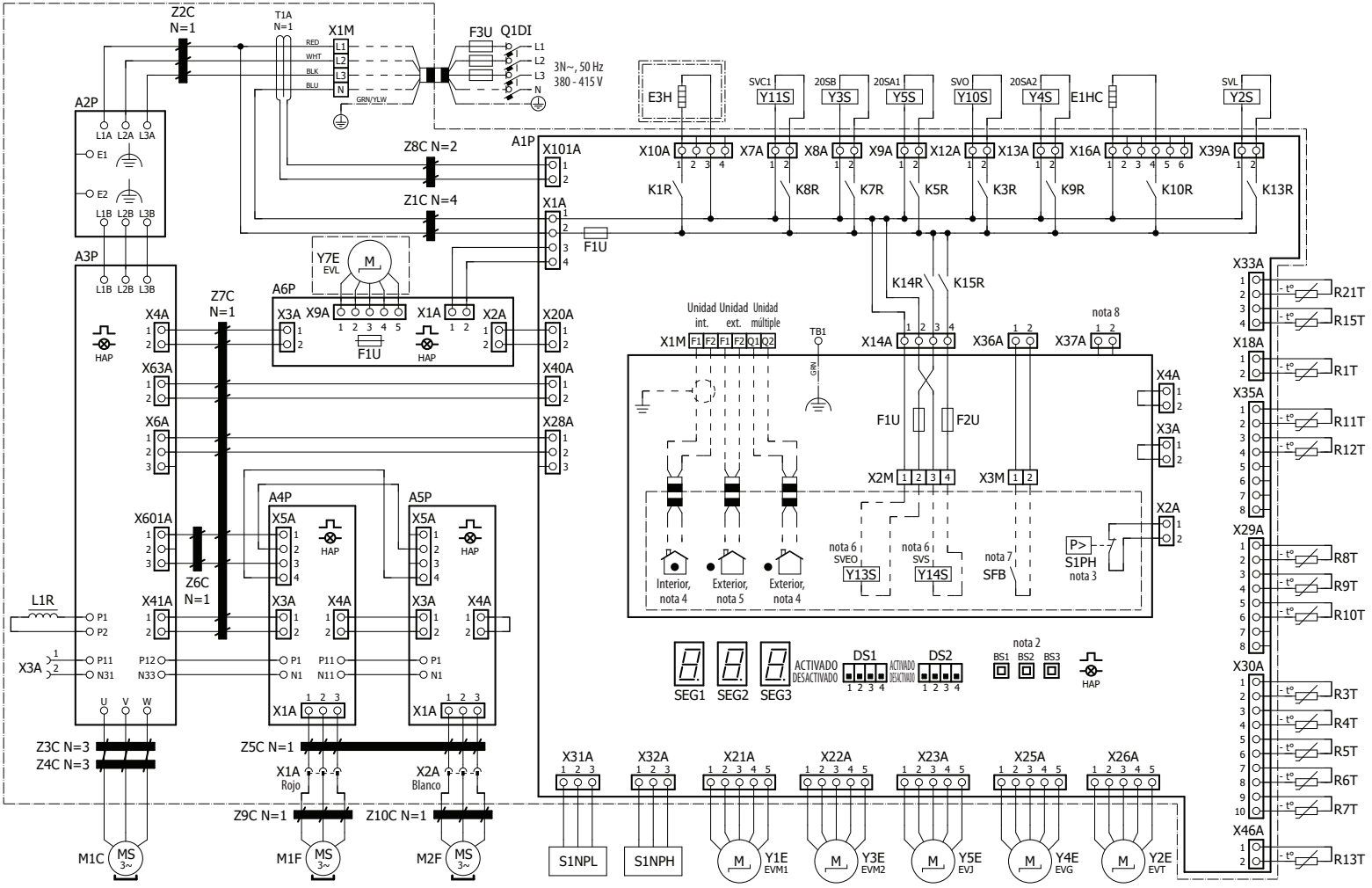

4D138281A