Multiple rows of units ( )

Multiple rows of units ( )

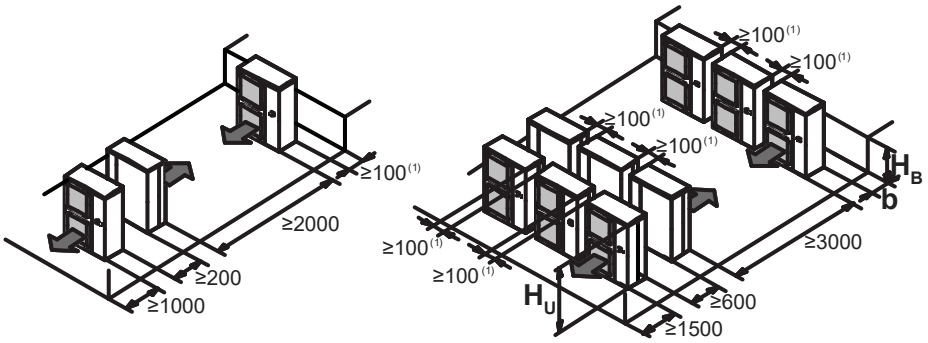

H_B H_U	b (mm)
$H_B \leq ½H_U$	b≥250
$½H_U < H_B \leq H_U$	b≥ 300
$H_B > H_U$	⊘

(1) For better serviceability, use a distance ≥250 mm

⊘ Not allowed