RXYSA-AY1

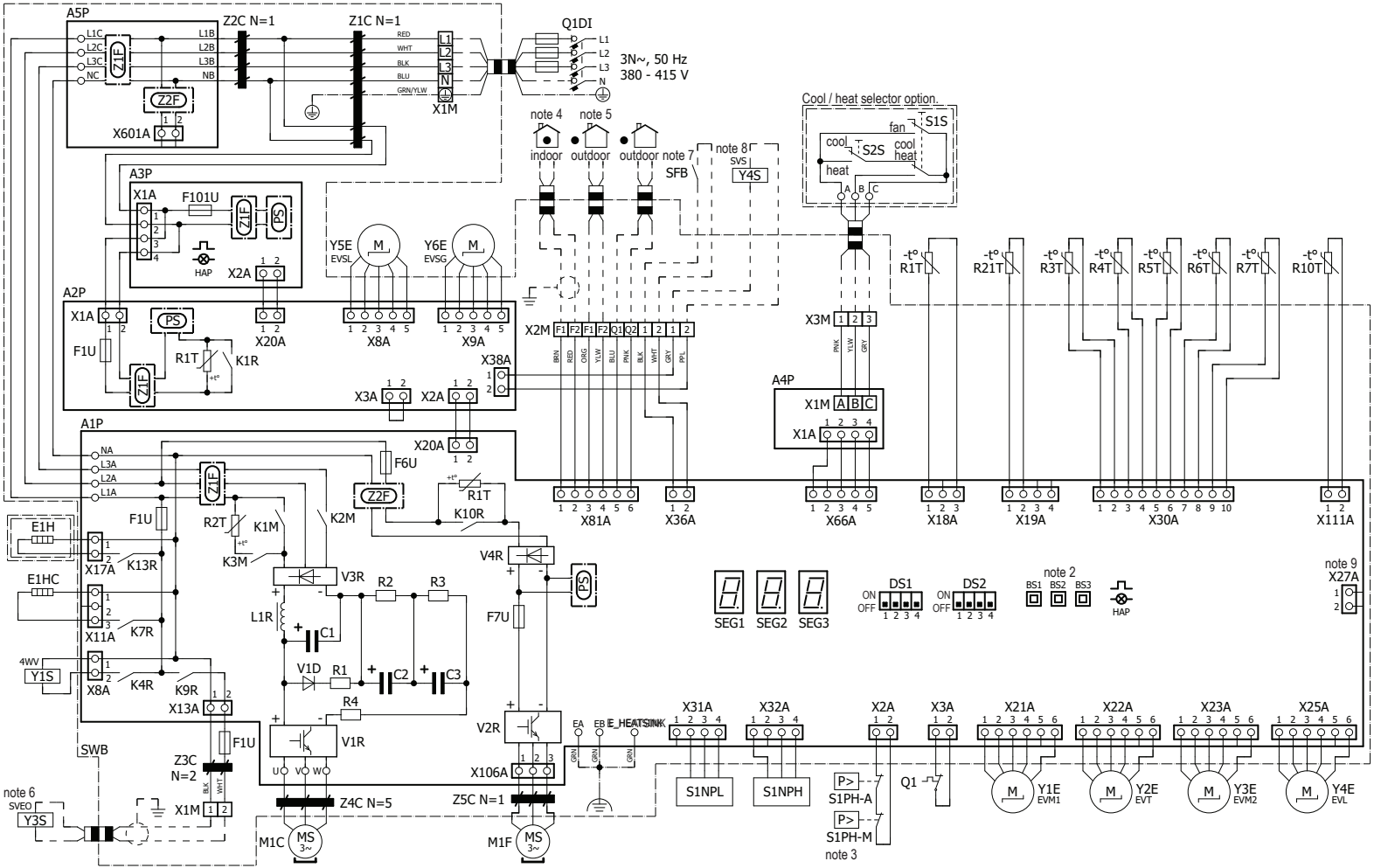

4D127737