VAM800FC

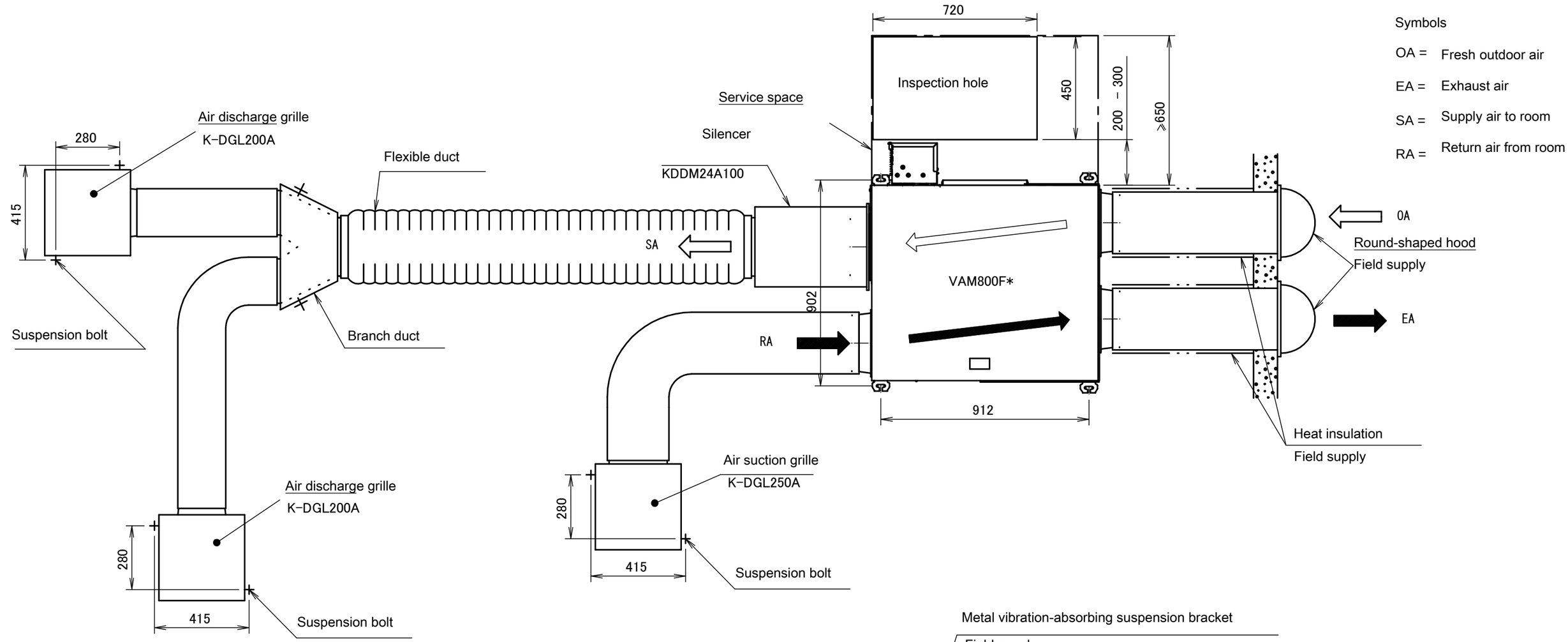

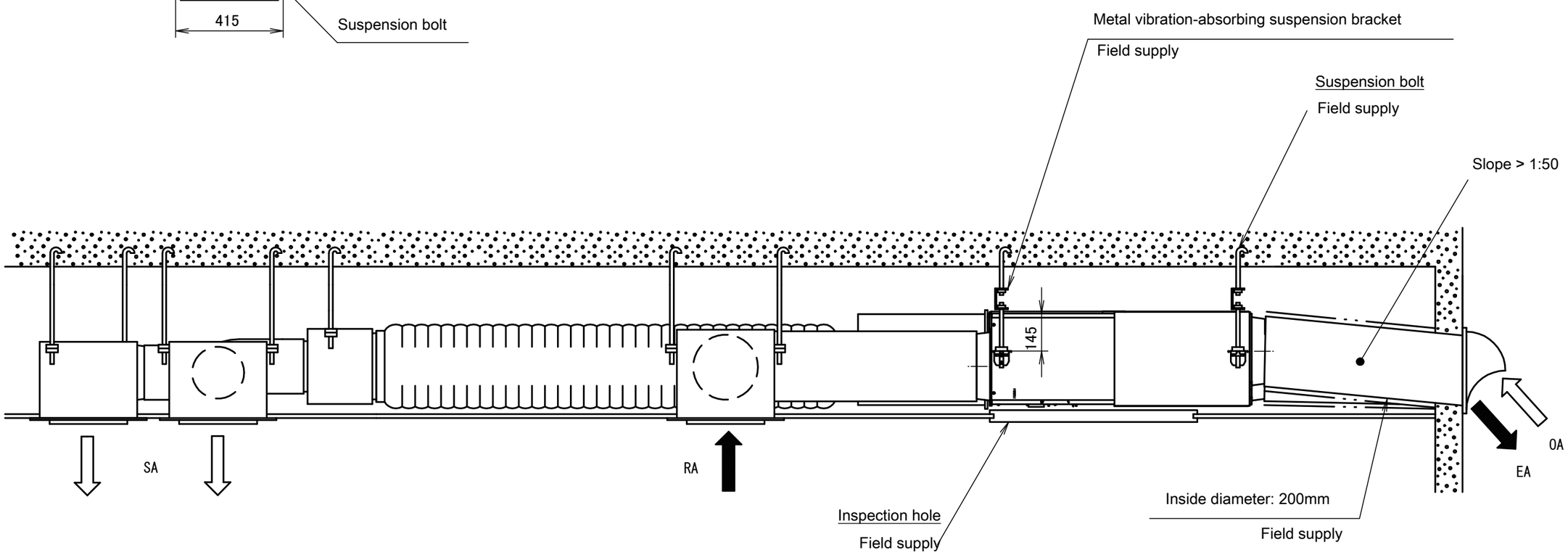

3D081270A